MAKSIWA®

BMT 3200.IR

Sliding Panel Saw 3200 mm Dado

INSTRUCTION MANUAL

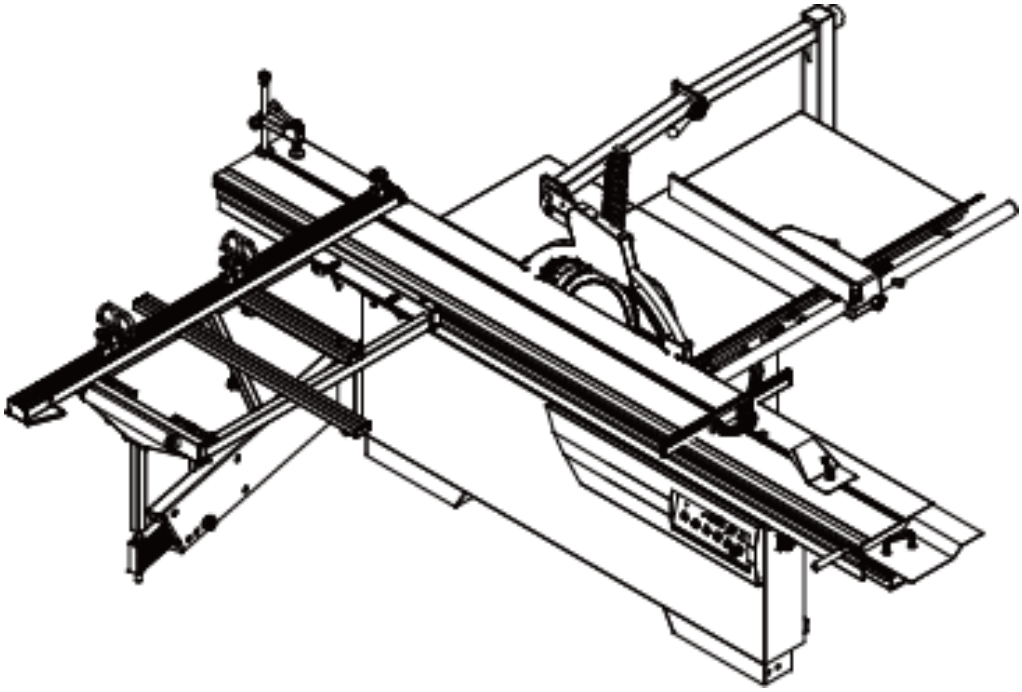

ATTENTION: FOR YOUR SAFETY, READ INSTRUCTIONS CAREFULLY BEFORE ASSEMBLING OR USING THIS PRODUCT. SAVE THIS MANUAL FOR FUTURE REFERENCE.

Greetings,

Congratulations, you just purchased the BMT.3200.IR Precision Saw, which was developed with the Maksiwa's highest standards of technology and quality. Your BMT.3200.IR Precision Saw allows you to have the highest productivity in woodworking. Besides a great fi nish, the BMT.3200.IR ensures that your cuts are always precise. It should be noted that to use this machine with maximum effi ciency, you should read and understand the instructions in this manual.
Visit our website to know about other products and technical assitance:
www.maksiwa.com/usa
tech@maksiwa.com

Attention!: The machine must be inspected immediately upon arrival. If the machine has been damaged during transport, or if any parts are missing, a written record of the problems must be submitted to the forwarding agent and a damage report compiled. Also be sure to notify your supplier immediately.

For the safety of all personnel, it is necessary to study this manual thoroughly before assembly and operation. This manual must be kept in good condition and should be considered as part of the machine. Furthermore, the manual must be kept to hand and within the vicinity of the machine so that it is accessible to operators when using, maintaining or repairing the machine.

MAKSIWA®

Maksiwa International Inc.
4100 N Powerline Rd, Suite D3 Pompa-
no Beach, FL

Call us free: 844-319-6594

tech@maksiwa.com
www.maksiwa.com/usa

MAKSIWA®

Contents

1.General.....05
1.1 Foreword.....05
1.2 Machine Identification.....05
1.3 Customer Service recommendations.....05
1.4 Copyright.....06
1.5 Spare Parts.....06
1.6 Disposal.....06
2. Safety Precautions.....07
2.1 Safety Regulations.....07
2.2 Residual Risks.....08
2.3 Safety and Information Signals.....09
3. Specifications.....10
3.1 Main Components.....10
3.2 Technical Specification.....10
3.3 Electrical Connection.....11
3.5 Noise Level.....13
3.5 Dust Extraction.....13
3.6 Safety Devices.....14
4. Installation.....15
4.1 Contents of Package.....15
4.2 Lifting and Unloading.....17
4.3 Installation Zone Characteristic.....17
4.4 Install of Loose Parts - Introduction.....18
5. Adjustment.....21
5.1 Setup and Control.....21
5.2 Extension Table Flatness Adjustment.....21
5.3 Rip Fence Precision Adjustment.....22
5.4 M30 Angle Meter Instruction Manual.....24
5.5 Magnetic Grid Digital Display Meter..27
6.Operating Procedures.....31
6.1 Machine Start And Stop.....31
6.2 Working Station.....31
6.3 Working with the Machine.....32
6.4 Correct Use for this Machine.....33
7.Maintenance.....34
7.1 Repace Saw Blade.....34
7.2 Overall Cleaning.....34
7.3 General Lubrication.....35
7.4 Replacement and Disposal.....35
8.Trouble Shooting.....36
9.Exploded View.....37
10. Terms of Warranty.....62

1 General Information

1.1 Foreword

This machine is desinged to make straight and angle cut for wood material, especially for wood board cutting. Some information and illustrations in this manual may difer from the machine in your possession, since all the configurations inherent in the machine complete with all the optionals are described and illustrated. Therefore, refer only to that information strictly connected with the machine configuration you have purchased.
With this manual we would like to provide the necessary information for maintenance and proper use of the machine. The distribution network is at your service for any technical problem, spare parts or any new requirement you may have for the development of your activity.
This manual must be read and understood before operating the machine. This will provde a better working knowledge of the machine, for increased safety and to obtain the best results.
To facilitate its reading, the manual has been divided into sections pointing out the most important operations. For a quick research of the topics, it is recommended to consult the index. To better stress the importance of some basic passages, they have been marked by some preceding symbols:

WARNING
Indicates imminent risks which may cause serious injury to the operator or other persons.
Be careful and scrupulously follow the instructions.

CAUTION
A statement advising of the need to take care lest serious consequences result in harm to material items such as the asset or the product.

1.2 Machine Identification

There is a identification plate fixed to the machine, containing the manufacturer's data, year of construction, serial number and technical specifications.

1.3 Customer Service Recommendation

Apply the machine to skilled and authorized technical staff to carry out any operation dealing with parts disassembly. Keep to the instructions contained in this manual for the correct use of the machine.

CAUTION
Only skilled and authorized staff shall use and service the machine after reading this manual.
Respect the accident prevention regulations and the general safety and industrial medicine rules.

1.4 Copyright

This manual should be handled confidentially. It is designated solely for those persons who work on or with the machine. All descriptions, texts, drawings, photos and other depictions are protected by copyright and other commercial laws. Illegal use of the materials is punishable by law.
This manual, in its entirety or parts thereof, may not be transferred to third parties or copied in any way or form, and its contents may not be used or otherwise communicated without the express written consent of the manufacturer.
Infringement of these rights may lead to a demand for compensation or other applicable claims. We reserve all rights in exercising commercial protection laws.

1.5 Spare parts

! Attention: Non genuine, counterfeit or faulty spare parts may result in damage, cause malfunction or complete breakdown of the machine.

If unauthorized spare parts are fitted into the machine, all warranty, service, compensation and liability claims against the manufacturer and their contractors, dealers and representatives shall be rejected. Use only genuine spare parts supplied by the manufacturer. Unless, specified by manufactor.

1.6 Disposal

Attention!: Used electrical materials, electronic components, lubricants and other auxiliary substances must be treated as hazardous waste and may only be disposed of by specialised, licensed firms.

If the machine is to be disposed of, separate the components into the various materials groups in order to allow them to be reused or selectively disposed of. The whole
structure is made of steel and can therefore be dismantled without problem. This material is also easy to dispose of and does not pollute the environment or jeopardize public health. International environmental regulations and local disposal laws must always be complied with.

2 Safety Precautions

2.1 Safety Regulations

WARNING
Indicates imminent risks which may cause serious injury to the operator or other persons.
Be careful and scrupulously follow the instructions.

The manufacturer disclaims all responsibilities for damages to persons or things, which might be caused by any failure to comply with the safety regulations.

- The machine operator shall have all necessary prerequisites in oder to operate a complex machiery.
- It is prohibited to use the machine when under the influence of alcohol, drugs or medication.
- All the operators must be suitably trained for use, adjustment and operation of the machine.
- The operators must carefully read the manual paying particular attention to the warning and safety notes. Furthermore, they must be informed on the dangers associated with use of the machine and the precautions to be taken, and must be instructed to periodically inspect the guards and safety devices.
- Before carrying out adjustment, repair or cleaning work, disconnect the machine from the electric power and lock the disconnect switch in its “OFF” position by setting the main switch to stop.
- After an initial bedding-in period or many hours of operation, the driving belts may slacken; this causes an increase in the tool stopping time (the stopping time must be less than 10 seconds). Immediately tighten them.
- The working area around the machine must be kept always clean and clear, in order to have an immediate and easy access to the switchboard.
- Never insert materials which are different from those which are prescribed for the machine utilization. The material to be machined must not contain any metal parts.
- Never machine pieces which may be too small or too wide ithrespect to the machine capacity. - Do not work wood which has evident defects (cracks, knots, metal parts, etc.)
- Never place hands among the moving parts and/or materials.
- Keep hands clear from the tool; feed the piece with the aid of a pusher.
- Keep the tools tidy and far away from those not authorized persons.
- Never employ cracked nor uckled, neither not correctlyreground tools.
- Never use the tools beyond the speed limit recommended bythe producers.
- Carefully clean the rest surfaces of tools and make surethat they find perfectly horizontally positioned, and with no dents at all.
- Always wear gauntlets when handling the tools.
- Mount the tools in the right machining direction.
- Never start the machine before having correctly installed all the protections.

- Connect the dust suction hoods to an adequate suction system; suction must always be activated when the machine is switched on.
- Never open doors or protections when the machine or the system is operating.
- Many unpleasant experiences have shown that anybody may wear objects which could cause serious accidents. Therefore, before starting working, take any bracelet, watch or ring off.
- Button the working garment sleeve well around the wrists.
- Take any garment off which, by hanging out, may get tangled in the MOVING UNITS.
- Always wear strong working footwear, as prescribed by the accident-prevention regulations of all countries.
- Use protection glasses. Use appropriate hearing protection systems (headsets, earplugs, etc.) and dust protection masks.
- Never let unauthorized people repair, service or operate the machine.
- The manufacturer is not responsible for any damage deriving from arbitrary modifications made to the machine. - Any transport, assembly and dismantling is to be made only by trained staff, who shall have specific skill for the specified operation.
- The operator must never leave the machine unattended during operation.
- During any working cycle break, switch the machine off.
- In case of long working cycle breaks, disconnect the general power supply.
- The operating method to be followed in the event of accident or breakdown, the machine should be turned off immediately and unplug from main power and ask for assistance for the authorized people. If a blockage is likely to occur, the workpiece should be move back a little and enable the equipment to be safely unblocked.

2.2 Residual Risks

Despite observance of all the safety regulations, and use according to the rules described in this manual, residual risks may still be present, among which the most recurring are:

- contact with tool
- contact with moving parts (belts, pulleys, etc..)
- recoil of the piece or part of it
- accidents due to wood splinters or fragments
- tool insert ejection
- electrocution from contact with live parts
- danger due to incorrect tool installation
- inverse tool rotation due to incorrect electrical connection
- danger due to dust inhalation in case of working without vacuum cleaner.

Bear in mind that the use of any machine tool carries risks.

Use the appropriate care and concentration for any type of machining (also the most simple).

The highest safety is in your hands.

2.3 Machine Safety

This signals may be applied on the machine; in some cases they indicate possible danger conditions, in others they serve as indication.
Always take the utmost care.

SAFETY SIGNALS:

Risk of eye injury. Wear eye protection.

Wear hearing protection systems.

Danger of electric shock. Do not access the area when the machine is powered.

Carefully read and understand the manual before using the machine.

INFORMATION SIGNALS:
Indicate the technical characteristics, direction of rotation and inclination, block and release, etc.
Carefully following the directions to simply the use and adjustment of the machine.
The signals are graphically described and do not require further explanation.

3 Specifications

3.1 Main Components

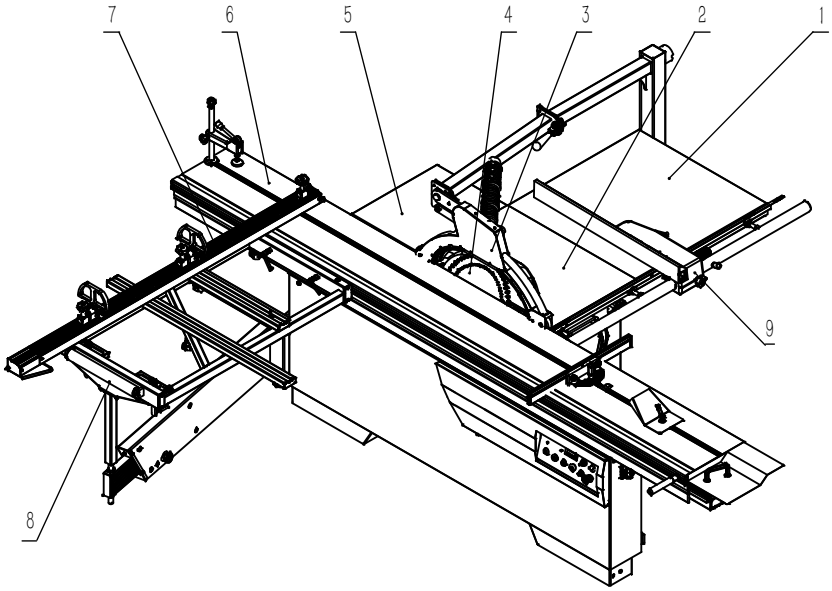

1 - Right extension table
2 - Main table
3 - Blade guard assembly
4 - Blade
5 - Rear extension table
6 - Sliding table
7 - Telescopic fence
8 - Square sliding table
9 - Rip fance assemnly

3.2 Technical Specification

Motor Voltage	220V-60Hz
Main motor power	5HP
Scoring motor power	1HP
Main blade diameter	315-30mm
Main blade speed	4000rpm
Scoring blade diameter	120-20mm
Scoring blade speed	8000rpm
Blade tilt	0~45°
Main table size	800x530mm
Right extension table size	800x820mm
Max.rip capacity	1250mm
Max.depth of cut	95mm@90° | 67mm@45°
Sliding table size	3200x375mm
Square sliding table size	1200x630mm
Dado blade diameter	200-30mm

3.3 Electrical Connection

- Electrical installation should be carried out by competent, qualified personnel.
- The mains connection should be made using the terminal box.
- Replacement of the power supply cable should only be done by a qualified electrician.
- Connect the main leads to a standard 220V±10% (60Hz+1%Hz) electrical supply which has protection devices of under-voltage, over-voltage, over-current the main connection must have maximum 25A time-lag fuse.

WARNING

Indicates imminent risks which may cause serious injury to the operator or other persons.
Be careful and scrupulously follow the instructions.

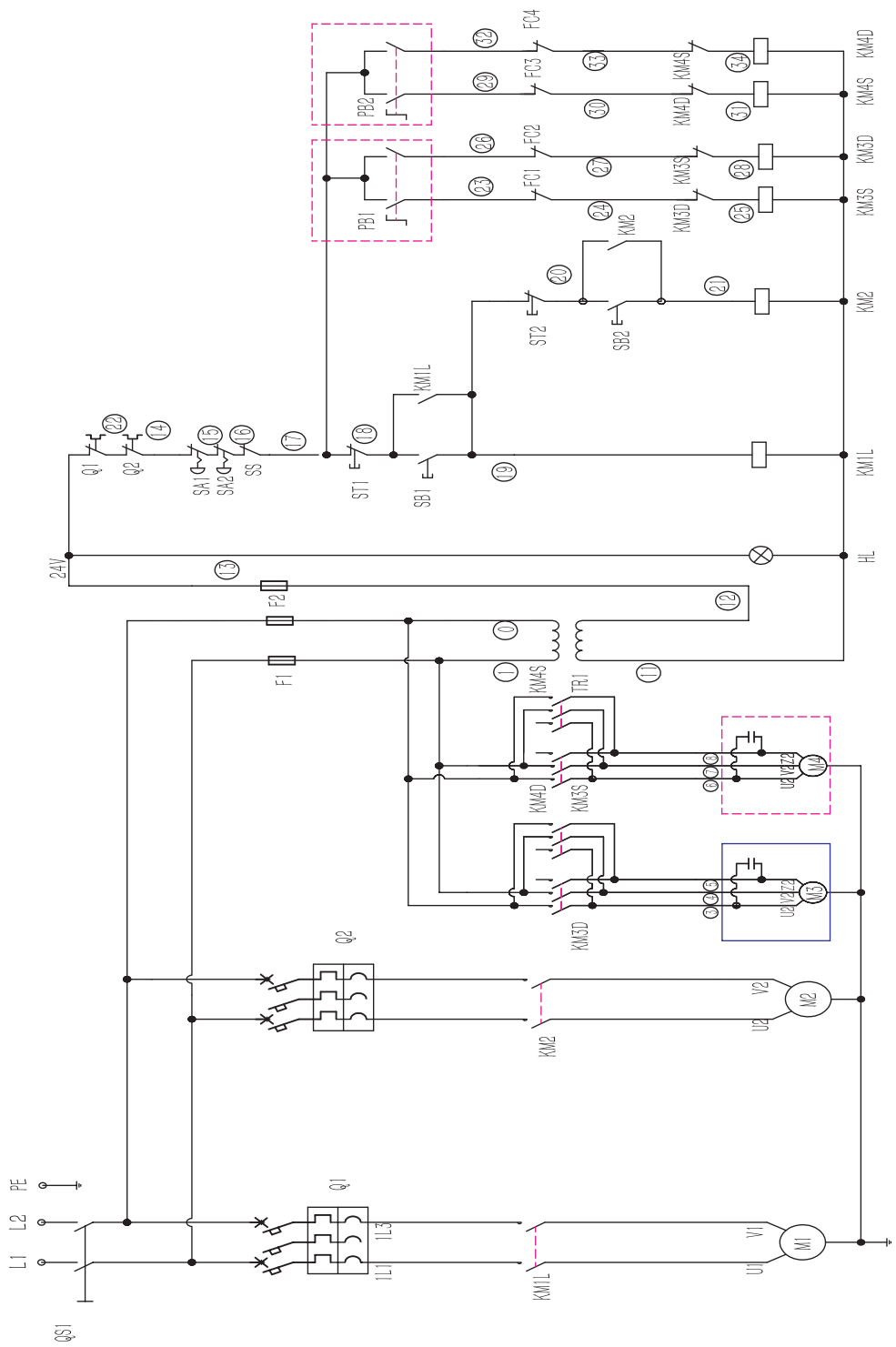

Code	Type	Description	Code	Type	Description	Code	Type	Description
KM1	3RT6025-1AC20	Contactor	F1/2	FNQ-1A	1A Fuse	PB1/PB2	M22-WK3-K20	Rotary Switch
KM2、KM3D/S,KM4D/S	3RT6023-1AC20	Contactor	F1/2	CHM1DU	Fuse holder	ST1/ST2	M22-D-R-X0-K01	Stop Button
Q1	3RV6021-4BA15	Overload protector	TR	BK-100-230V-24V-A	Transformer	SA1/SA2	HY57B-02	Emergency button
Q2	3RV6011-1FA15	Overload protector	SB1/SB2	M22-D-G-X1-K10	Start Button	HL	AD16	Power Light

3.4 Noise Level

	No Load	Load
Sound Pressure Level	< 80.4cB (A)	< 85.7dB (A)
Sound Power Level	< 98.1dB (A)	< 100.7dB (A)

Associated uncertainty K=4dB

Measurement made in accordance with EN ISO 3746:1995 and EN ISO 11202:1995

The noise levels measured are emission levels and not necessarily the safe working level. Although there is a correlation between the emission levels and the exposure levels, this cannot be used reliably to determine whether or not further precautions are required. The factors which affect the actual level of operator exposure include the duration of exposure, the ambient characteristics and other sources of emission, for example, the number of machines and other adjacent machining. The permitted exposure values may also vary from country to country. Nevertheless, this information allows the user of the machine to better evaluate the dangers and risks. Other factors which reduce exposure to noise are:

- correct tool choice
- tool and machine maintenance
- use of hearing protection systems (e.g. headsets, earplugs,...)

WARNING

Indicates imminent risks which may cause serious injury to the operator or other persons.

Be careful and scrupulously follow the instructions.

3.5 Dust Extraction

Proper suction eliminates the risks of dust inhalation and aids better functioning of the machine. The tables list the minimum air flow and speed values referenced to each single suction operation.The related pressure drop at the dust port is 530Pa.

Saw	
Upper hood	Lower hood
Air flow 140 cu.m/h	690 cu.m/h
Minimum air speed 20 m/s	

Ensure that the suction system guarantees these values at the hood-houth connection point. (Fig.3.5)

Suction mouth diameter:

A - Blade guard ..... ø100 mm(ø76mm)

B - Body dust suction ..... ø100 mm(ø120mm)

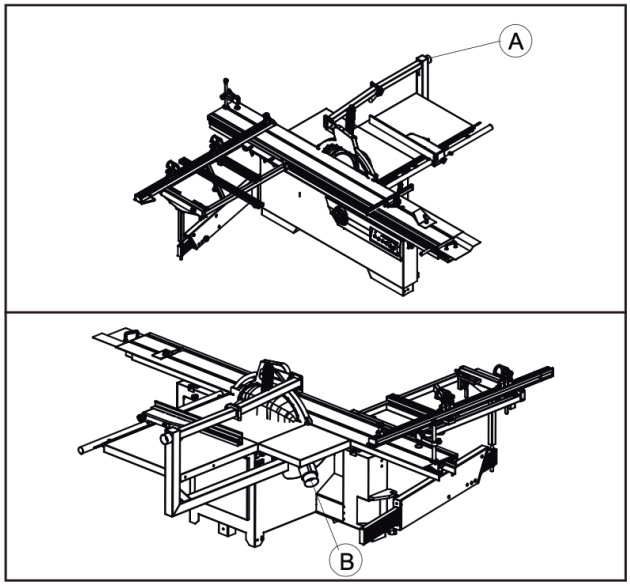

Fig.3.5

Connect the mouths to the suction system with flexible tubes of adequate diameter. Tighten with clamps. The tube must be positioned in such a way so as not to obstruct the operator during machining.

WARNING
Indicates imminent risks which may cause serious injury to the operator or other persons.
Be careful and scrupulously follow the instructions.

3.6 Safety Devices

The machine is equipped with the following safety devices: (Fig.3.6)

A - Safety Switch.

Stops the machine if the guard D is opened to perform operations on the blade.

B - Saw blade guard

Emergency Switch

When the button is pressed, the power will been cut immediately. It is a mechanical-operated push-button. Reset this button by turning it clockwise.

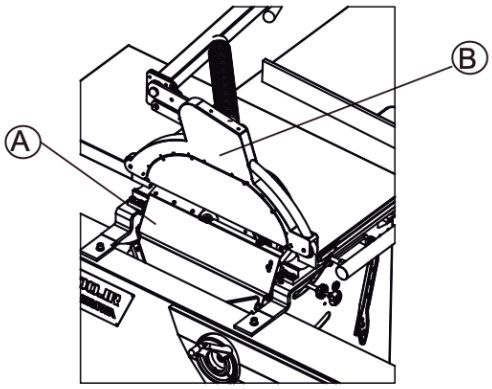

Fig.3.6

4 Installation

CAUTION
Assembly need to be done by an experienced and trained person.

4.1 Contents of Package

- The machine is supplied partly assembled. Prior to use, further assembly is required.
- When unpacking the machine the following components are included for the initial assembly.
- If any parts are missing, do not attempt to assemble the machine; plug in the power cord, or turn the switch on until the missing parts are obtained and properly installed.

Total two carton:

1. Fixed blade cover Assembly
2. Rear extension table
3. Square sliding table
4. Telescopic fence assembly
5. Frame assembly
6. Guide rail
7. Scale bracket
8. Rip fence assembly
9. Right extension table
10. Slide table(packed separately)

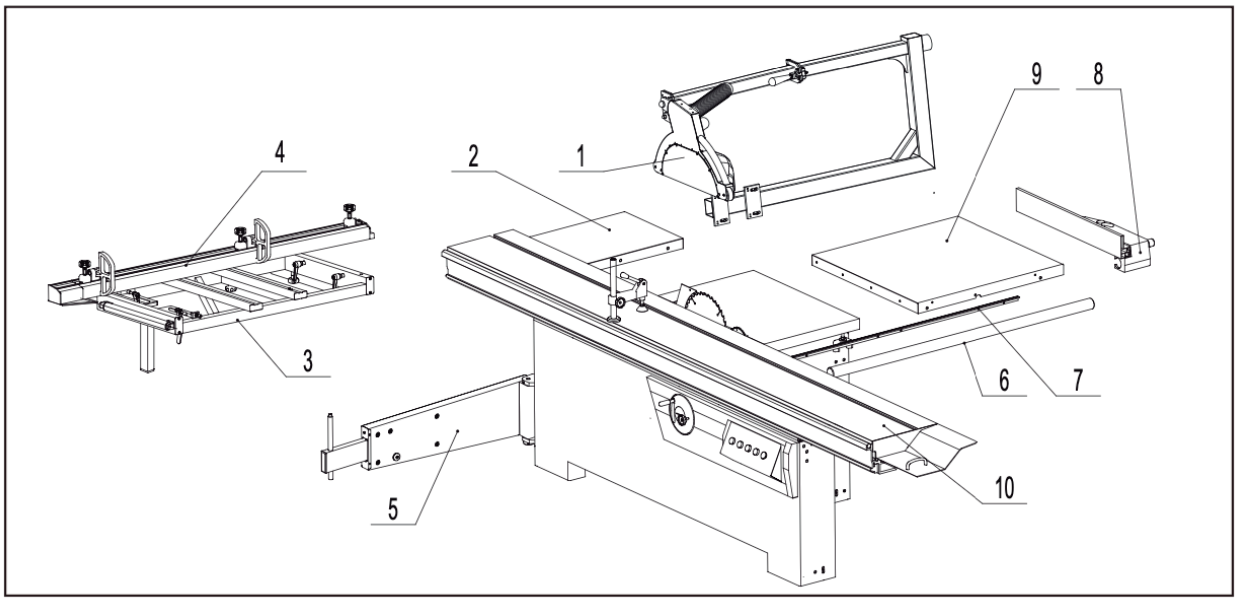

Fig.4.1

4.2 Lifting and Unloading

WARNING

Lifting and handing should only be carried out by skilled personel specially trained to execute this kind of operations. During loading and unloading, avoid knocks to prevent damages to persons and things. Make sure no one is standing under the overhung load and/or within the bridge crane working range during machine lifting and handing.

Lifting may be carried out by bridge crane or self-propelled lift truck. Before starting the manoeuvres, free the machine of all the parts used for transport or Packaging that have remained on the machine. Check that the capacity of the lifting equipment is adequate for the gross weight of the machine indicated Fig.4.2.

If hoisting is carried out with a lift truck, proceed as follows:

- adjust the width of the forks A to 550 mm
- Insert forks A as in the figure in correspondence to name plates E ensuring that these are wedged against the back of the rear feet D.
- If a bridge crane or a crane is available,proceed as follows:
- provide two slings B of suitable length and capacity (Belts minimum length 4000mm)
- lift the slings and position them as is shown in the Fig.4.2
- fasten the slings to the bridge crane C having adequate lifting power
- move the bridge crane by small steps to allow the slings B to settle, until optimum stability conditions are reached – lift carefully and slowly, without causing the load to swing, and place the machine in the selected setting
- remove the protective wax coat from all tables and unpainted surfaces, using kerosene or its derivative products. Do not use any solvent, petrol or gas oil, which might dull the paint or oxidate machine parts.

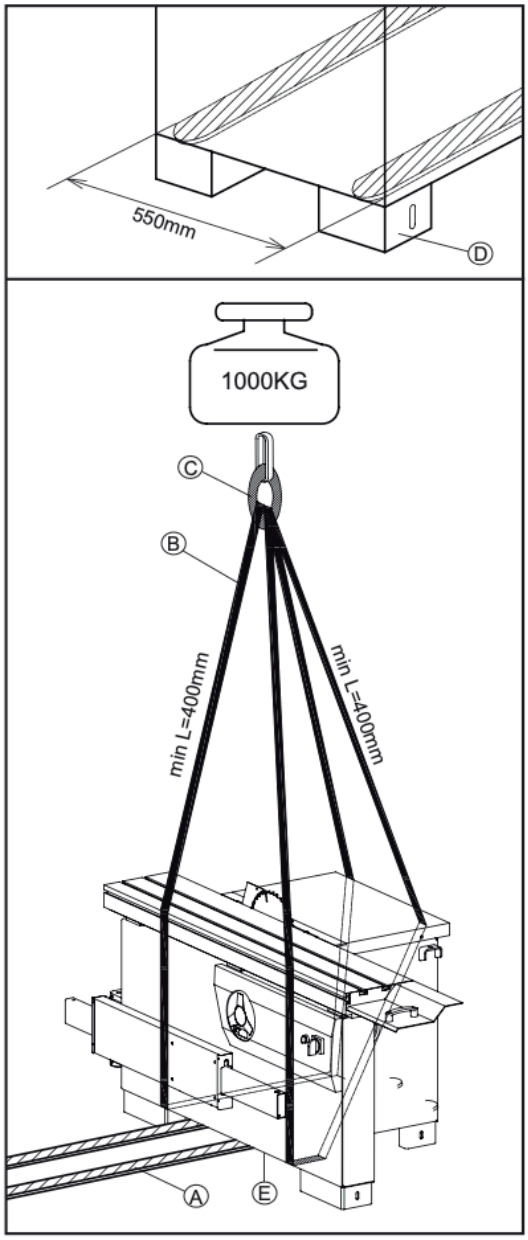

Fig.4.2

4.3 Installation Zone Characteristics

WARNING
It is prohibited to install the machine in explosive environments.

The installation zone must be selected evaluating the work space required depending on the dimension of the pieces to be machined,and taking into account that a free space of at least 800 mm must be left around the machine.It is also necessary to check the floor capacity and its surface, so that the machine base is evenly resting on its four supports.A power outlet and a chip-suction system connection shall be close to the selected machine setting and it must be conveniently lighted (luminous intensity: 500 LUX).

FIXING TO THE FLOOR

1. The machine must be fixed to the floor.
2. -Use bolt / nut A to level the feet to ensure machine is well located.
3. -Put expansion bolts D (not supplied) into ground, use washer / lock washer C and hex nut B to fasten the bolts.

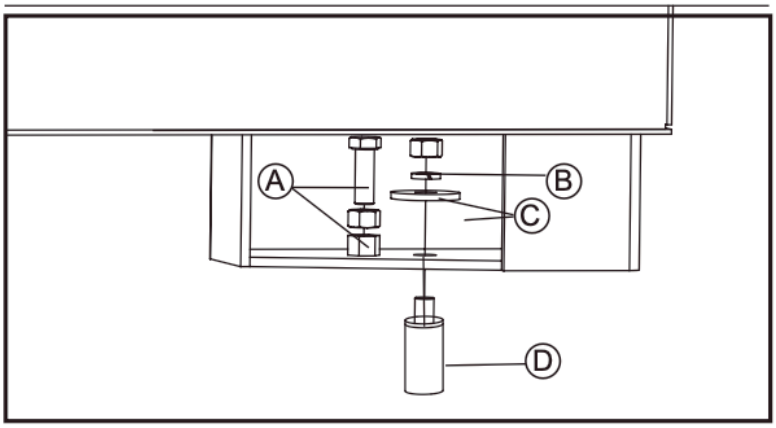

Fig.4.3

4.4 Install of Loose Parts - Introduction

A few elements will be disassembled from the machine main structure due to packaging and shipping requirements. These loose parts should be installed as follows.

WARNING

Please tighten all bolts and nuts absolutely. Otherwise, may cause machine wobble or serious injury to the operator or other persons.

4.4.1 INSTALL EXTENSION TABLE

Tools Required for Assembly:

- Wrench 16mm
- L Wrench 6mm
- Install Extension tables A to main table C with bolt 1 and washer 2.
- Install set screw 3 for micro-adjustment.

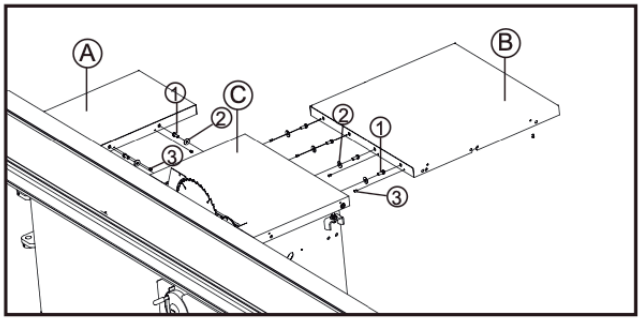

Fig. 4.4.1

4.4.2 INSTALL BLADE GUARD AND HOSE SUPPORT ROD

Tools Required for Assembly:

- Wrench 18mm
- Install blade guard A on body B with parts 1 and 2.

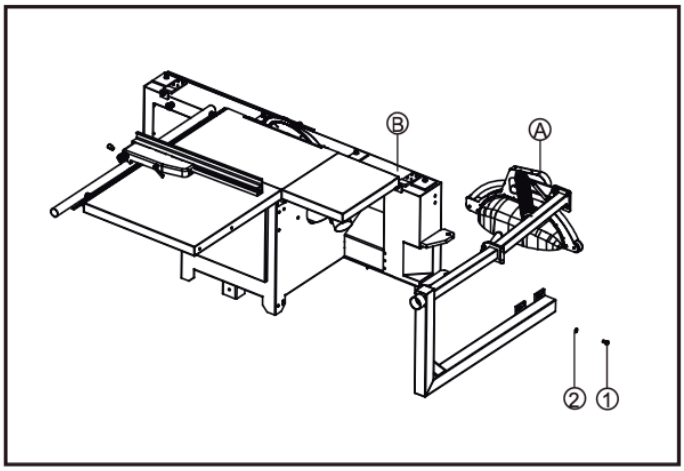

Fig. 4.4.2

4.4.3 RIP FENCE PRECISION ADJUSTMENT

- Tools Required for Assembly: 10mm Allen wrench
- Pass B, C, and D through E and fix them on A (don't fix them too tightly, there are four sets)
- Adjust the slider to the alignment bolt, then tightened the Allen bolts “

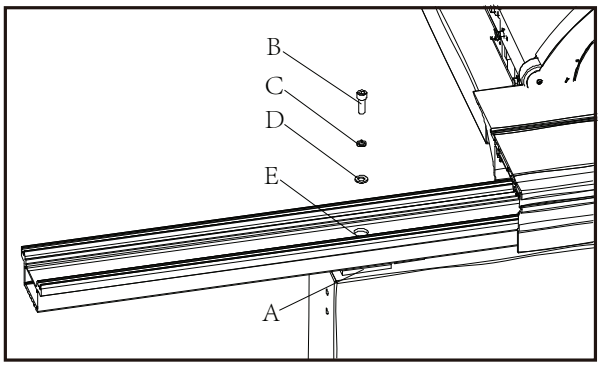

Fig.4.4.3

4.4.4 INSTALL SQUARE SLIDING TABLE

- Put the square sliding table C into the slot of sliding table A.
- Put the support rod D into the hole of square sliding table C and the hole on support arm E.
- Lock the handle B.

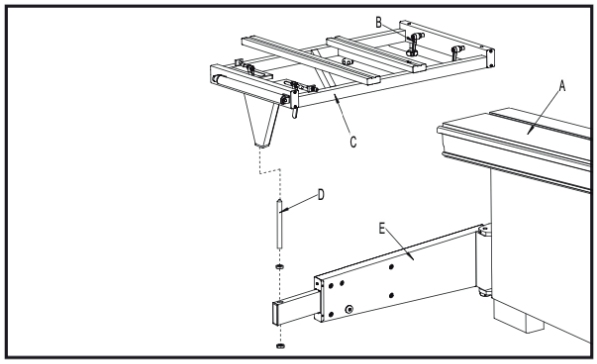

Fig.4.4.4

4.4.5 INSTALL TELESCOPIC FENCE

- Put the pin A of telescopic fence into the hole which is on the square sliding table, and mount the handle B to the pin.
- Lock the knob C for stable tighting.
- The Knob D is designed to micro-adjust perpendicularity between telescopic fence and blade.

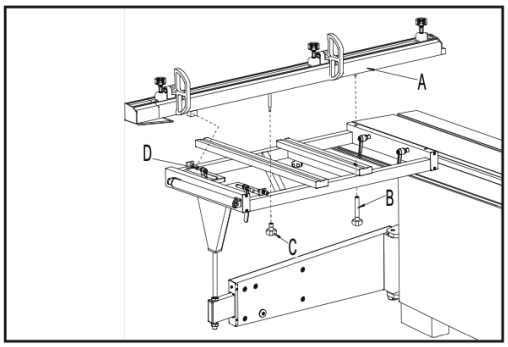

Fig.4.4.5

4.4.6 INSTALL FENCE RAIL

Tools Required for Assembly: - Wrench 18mm

- L Wrench 16mm
- Install scale seat B to tables with screw 1.
- Put the scale A into the slot of scale seat B.
- Install guide rail C on the workbench through parts 2, 3, 4, and 5

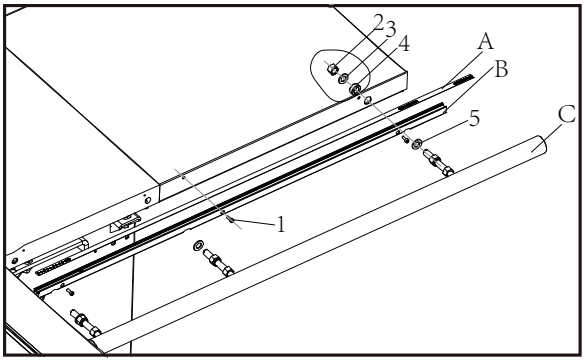

Fig.4.4.6

4.4.7 INSTALL RIP FENCE

- Install the rip fence seat A to guide rail B as the picture shown.
- Install the screw C onto the guide rail B.
- Install the rip fence D to the fence seat A along its slot.

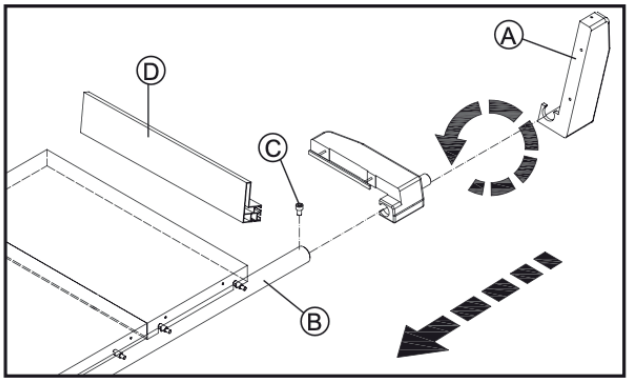

Fig.4.4.7

5 Adjustment

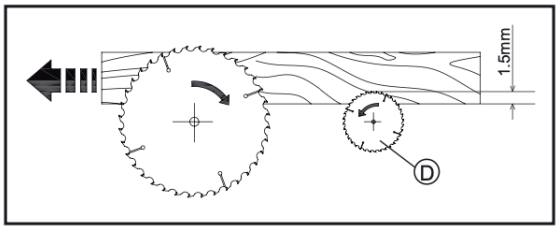

WARNING
Handle the tools with protective gloves.

5.1 Setup and control

WARNING
For cutting panels coated with finishingmaterial, you have to use the scorer F. Position the scoring saw blade in order to have an engraving equal to 2mm.
Proceed as follows if it is necessary to adjust scorer positioning with respect to the saw:
Tools Required for Assembly: - L wrench 5mm
- Loosen the hand wheel A, then use the handle B to adjust the saw blade height, after that, tighten the hand wheel A.
- Use the 5mm allen wrench to loosen the bolt D about 3 circles, then use the 5mm allen wrench to rotate the shaft D to adjust the saw blade position, after that, tighten the bolt D.

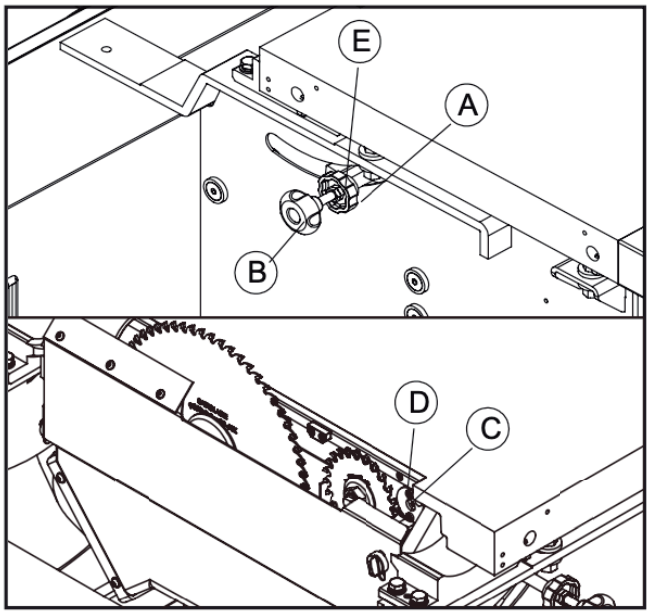

Fig.5.1

5.2 Extension Table Flatness Adjustment

Tools Required for Assembly: - Straight edge
- Feeler gauge
- L wrench 4mm

- Wrench 16mm
- Put the straight edge B on the main table and extension tables, use feeler gauge to check the flatness.
- Re-tighten the bolts A to micro-adjust the flatness.

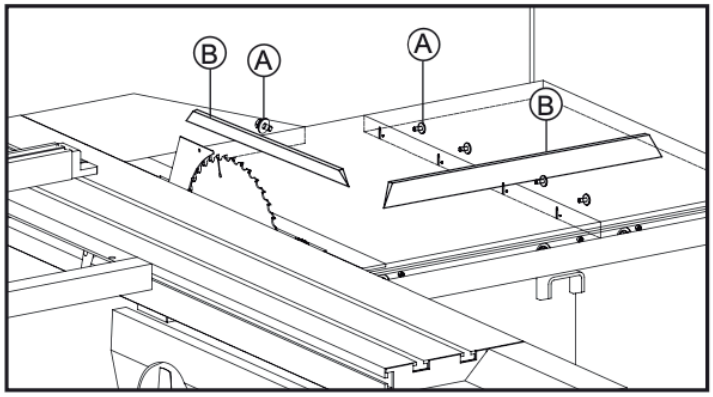

Fig.5.2

5.3 Rip Fence Precision Adjustment

Tools Required for Assembly:

- Straight edge, Angle gauge, Depth gauge - Feeler gauge
- Wrench 18mm
- Use Angle Gauge A and Feeler Gauge to check the verticality between table and rip fence. Loose 4pcs shaft B, and micro-adjust its position up and down to get better verticality.
- Use Straight Edge and Depth Gauge to check the parallel between blade and rip fence. Loose 4pcs shaft B, and micro-adjust its position forward and backward to get better parallel.

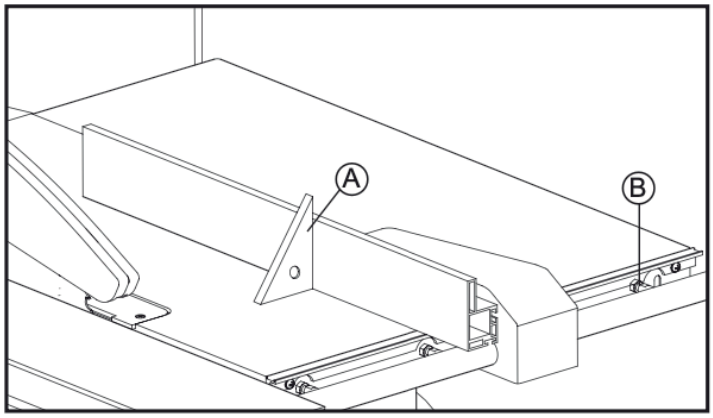

Fig.5.3

5.4 M30 Angle Meter Instruction Manual

- S5 digital tube display, clear and easy to read
- Measuring scope:±180°
- Automatically read the angle for unexpected power outage - Buttons can be locked, avoiding faulty operation.
- Angle data react quickly
- Initial angle setting(0°)
- Final angle setting(45°)

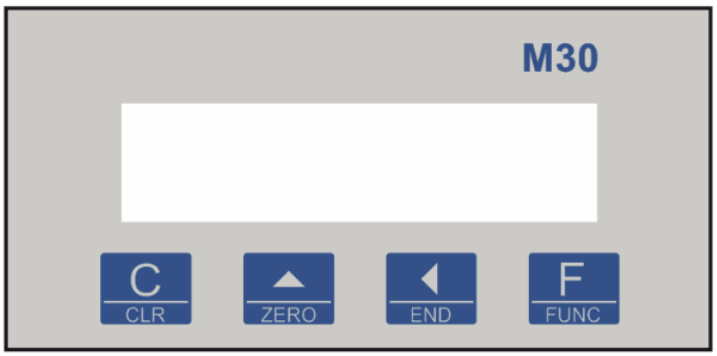

Fig.5.4

5.4.1 SPECIFICATIONS/PERFORMANCE

Electric performance		Mechanical performance	
Resolution ratio	0.1°,0.5°	Out dimension	74*36*32mm
Measurement range	±180°	Cutout size	66*32mm
Current	Max.50mA	Fixed mode	Fixed by screw on back
Power	DC:9V~24V;AC:9V~24V	Sensor	Default wire length 2.5m
Operating temperature	0°C~+50°C	Waterproofing grade	Data display instrument IP40, sensor IP65
Storage temperature	-10°C~+60°C	Weight	Max.230g

5.4.2 BUTTON INSTRUCTION

short press:ESC long press:clear the result, long press again will turn back to earlier result

short press:Increase long press:show initial angle, initial angle can be set in menu P06, operate cautiously

short press:Move to next long press:Invalid

short press:Confirm long press:entering into menu

5.4.3 DISPLAY INSTRUCTION

Display content	Info. Statement
-179.9~180.0	Display the measured angle
E30	Display item no. when turning on
Err06	Sensor fault:1)sensor damaged:2)sensor wire damaged:3)display function damage
Err	Beyond Angle linear correction, calibration failure
nte	nte

5.4.4 MENU INSTRUCTION

No.	Function Description	Parameter	Default parameter	Parameter Description	Remarks
P00	Resolution	0.1 , 0.5	0.1	Angle display resolution	Default setting 0.1°
P01	Correction parameters	0.0001~2.0000	1.0000	Angle correction parameters	Angle liner proportion adjustment, return ERR if adjustment fail
P02	Shake to unlock	0, , 0.2, 0.5, 1, 2	0.2	Shake exceed the default degree, unlock automatically.	Default setting 0.2°
P03	Lock time	0~9	5	Maintains a constant Angle for a period of time, lock the Angle	Default setting 5s
P04	Angle direction	0, 1	0	Positive and negative Angle switching	0: clockwise Angle is positive; 1: clockwise Angle is negative
P05	Press to lock	0, 1	0	Lock CLR, ZERO, END	0:unlock;1:lock
P06	Initial angle	000.0~359.9	0	Initial Angle value, regardless of the sensor in which position, long press ZERO will display the Initial Angle value	When the initial Angle shows 0, can do any position reset function. Under the guidance of manufacturer operation is recommended.
P07	Final angle	000.0~359.9	45.0	Final Angle value, regardless of the sensor in which position, long press ZERO will display the final Angle value.	Default final angle is 45 °, especially designed for woodworking machinery.
P08	Buzzer	0, 1	1	Buzz warning every 45°	0:Stop to use;1:start to use, -135°, -90°, -45°, 0°, 45°, 90°, 135°buzz warning

5.4.5 Fast Adjustment

Internal calibration has been done at factory, if customers have need to do further liner calibration, please following below steps (take woodworking equipment as an example):

1. Equipment operate to the initial position, long press the ZERO key, the current Angle will be set to 0 °
2. Equipment operate to END position, long press the END key, the current point is set to 45 °
3. Angle linear correction is complete. Adjust the P06, P07 data, can be set to other Angles

5.4.6 Dimensions

Installation instructions: sensors use M3 screws, meter use back panel thimble.

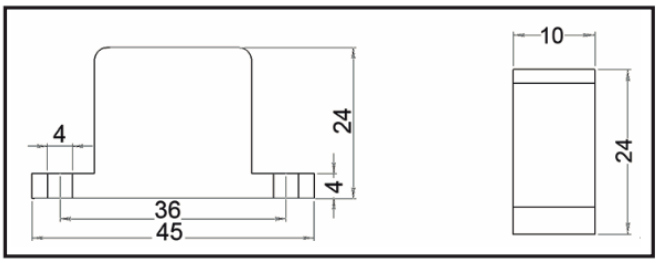

Sensor Dimension

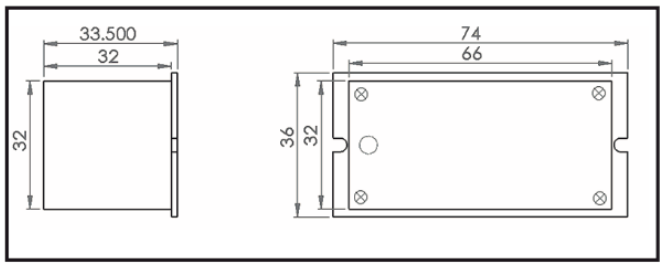

Meter Dimension

5.4.7 CAUTIONS

When install this product, if the deviation is too big, will influence the use of precision, can't even use

- Please do not use this product in the environment of corrosion, acid or alkali, direct sunlight, etc., it may cause failure.
- Reading head wire bending radius must be greater than 25 mm
- The installation of this equipment should be at least 0.5 meters from the circuit breaker, relay, motor capacitor, brakes, clutch, inverter, etc.
- Cables direction must be separate with power lines in order to reduce noise.

5.5 MAGNETIC GRID DIGITAL DISPLAY METER

- Intelligent liquid crystal belt backlight ,High definition display mode of large character.
- Icon mode definition,Common function,shortcut key operation(Modify the current value，Sensor adaptive mode,Direction of modification)
- Structure design of all aluminum alloy shell, Super strong anti-interference ability.
- Sensor aviation plug butt(Optional).
- Two point self expansion damping type installation method.
- Relative value, the absolute value can be switched arbitrarily to display.

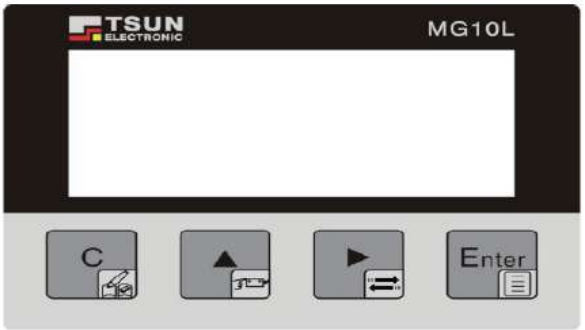

Fig.5.5

5.5.1 SPECIFICATIONS/PERFORMANCE

Electrical properties	
System precision	±（0.03+0.01xL） L unit： meters
Repeatability precision	Max.±0.01mm
resolution ratio	0.01、0.05、0.1、1
indication range	-999999~999999
Current consumption	Max.500uA（LED Not light）
Internal Battery	Section 2 battery（Super long standby）
working temperature	-20℃ ~ 70℃
Mechanical properties	
Maximum size	96x72x49.5mm
Hole size	91.5x65.5mm
Inductionline length	customizable
Read head gap	Standard 1~2mm
Translational speed	Max.5m/s
Matched magnetic ruler	Ms500/5mm

5.5.2 BUTTON / DESCRIPTION

Long press 4 seconds:Modify the current value.
Functional status short press:Remove or withdraw from the interface.

Long press 4 seconds:Sensor adaptive calibration.
Functional status short press:Modify the current display parameters.

Long press 4 seconds:Change the direction of incremental sensor . Functional status short press:changing-over Or shift parameters.

Long press 4 seconds:Enter the menu .
Short press:Modify the confirm button.

+ Combination key:From the initial value.

kindly reminder:Ask the client to pay attention to the small icons on the buttons and understand the meaning of the icons,Will be more rapid and simple operation of digital display meter.

5.5.3 EXPLICIT DECLARATION

error display	message saying
E01	Prompt parameter input error
E06	Sensor failure：①Sensor damage ；②Sensor cable damage；
E07	Magnetic stripe detection failed：①No magnetic stripe；②Magnetic stripe damage； ③The reading head is too far away from the magnetic stripe
E08	Low battery，Suggest changing battery immediately
E09	read head is too close to the tape
E10	read head is too far from the tape
E12	No battery or battery too low
E20	measurement value is out of range

5.5.4 PARAMETER DESCRIPTION

number	Function description	parameter	Default parameters	Parameter description	remarks
P01	Measurement mode switching	Length / inch / angle	0	0:Length pattern 1:inch 2:Angle pattern	After modification,Press the confirmation key:
P02	Set the current position (Or through the shortcut keys)	-999999~~99999999	0	Need to enter the password: 1234	After modification,Press the confirmation key:
P03	Measurement direction Or (through a shortcut key)	0 1	0	0 or 1 represents two directions	Change the direction of the sensor and change the direction of the measurement
P04	Length resolution	0.01 0.1 1	0.01	Length mode default single: mm	After modification,Press the confirmation key:
P05	Timing off screen	0:lock 1:open	0	0:Lock the automatic closing screen 1:5 minutes after the default screen off screen	Wake up by any key
P06	Ratio coefficient	0.00001~2.99999	1	Display value = Real value measurement × Ratio coefficient	After modification,Press the confirmation key:
P07	Adaptive calibration	GO - - -–	GO	GO:get into the state, Slow motion(Can move over and over)sensor,About 10 seconds to move 150MM,Return to the current value after learning to complete	If the correction is not successful, adjust the distance between the sensor and the magnetic stripe,The distance between the reading head and the magnetic ruler is controlled in 1mm-2mm

P08	Concentric circle diameter	0.01~9999.99	500.00	The diameter of a disk attached to a magnetic strip	The diameter needs to be added to the thickness of the magnetic strip:1.5mm*2=3mm
P09	Angular resolution	0.01° 0.01’ 0.05’ 0.1’ 1°	0.01°	Angle pattern effectiveness	After modification,Press the confirmation key:
P10	Second sets to measured values,offset setting	0-----999999	0	Offset 1 2 3	Please press the combination key: + Offset the offset value
P11	Absolute /relative mode	0:open 1:lock	0		After modification,Press the confirmation key:
P12	Origin value setting	0-----999999	0	The value of the input will be saved as the original point value	After modification,Press the confirmation key:
P20	Restore factory settings	77777	77777	Restore the default factory settings	Password validation needs to be entered before recovery:1234

5.5.5 MAGNETIC SCALE DESCRIPTION

Magnetic scale consists of 3 parts.:total thickness of the three layer is1.8mm,width of10mm, The length of 50m roll packing.
A: Soft magnetic ruler
B: Non magnetic steel
C: This layer is A soft magnetic scale protection strip(as shown in the figure)

Magnetic paste:The thin tape must be adhered to clean、dry、a flat surface.Is a typical cleaning agent 50% alcohol or 50% mixture of water or heptane (Please note that on exposure to this solvent manufacturer).in copper、yellow metal surface should ensure that no clean surface oxide layer.

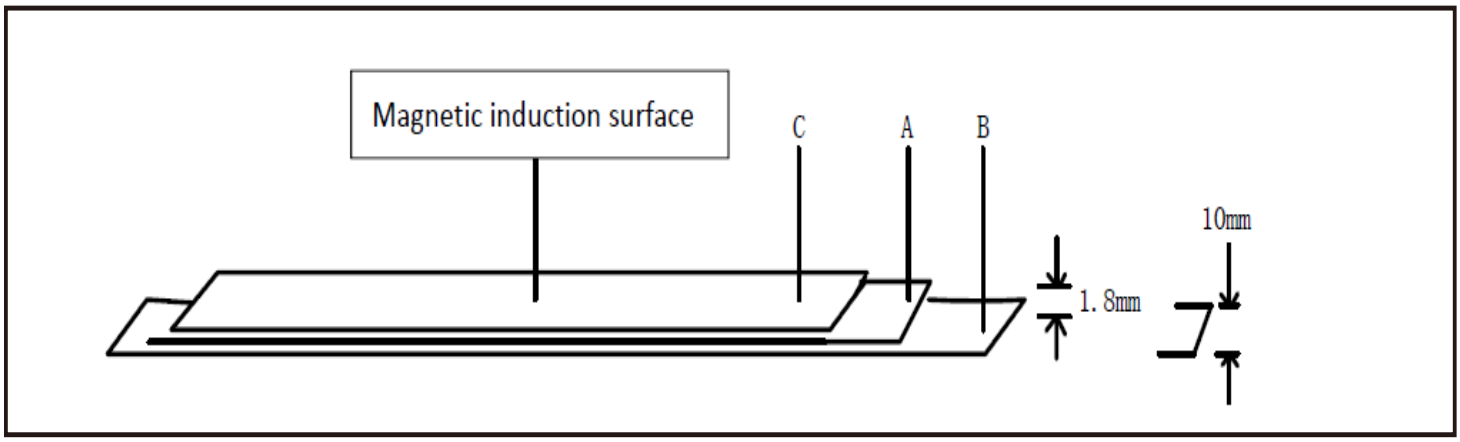

5.5.6 READ HEAD SIZE AND INSTALLATION INSTRUCTIONS

1:Read heads and magnetic scale spacing between 1mm----2mm control
2:Install the read head, read head logo, press the arrow pointing in the direction of alignment of magnetic ruler
3:Read head installation angle deviation requirements(see figure)

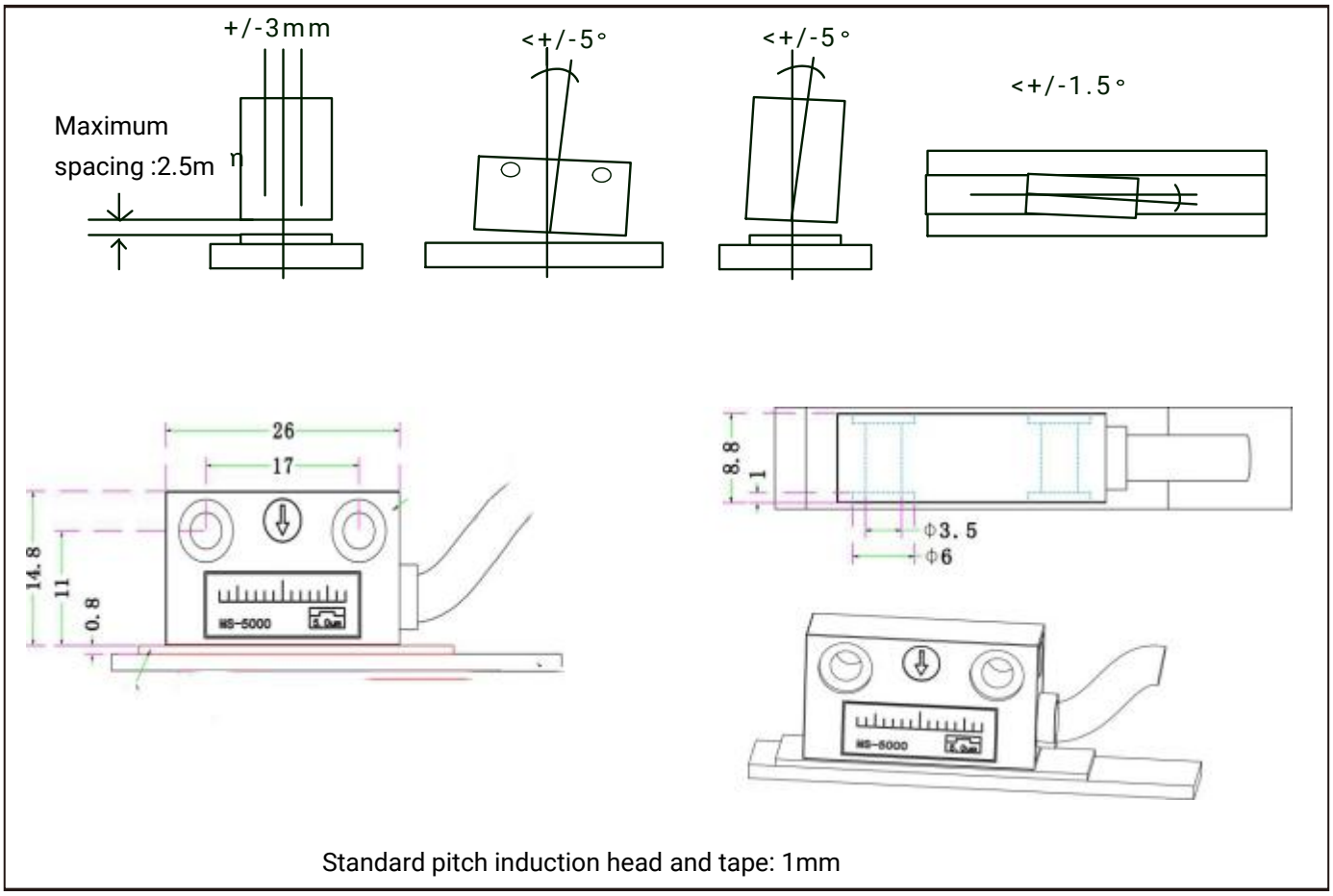

Standard pitch induction head and tape: 1mm

5.5.7 MATTERS NEEDING ATTENTION

1: the standard distance distance for 1mm magnetic tape read head
2: installation of this product,If the deviation is too large,It will affect the use of precision,Can’t even use
3: read head radius bending sensor line must be greater than 25mm
4: Is equipment installation should leave the circuit breaker,electric relay Motor capacitors,Arrester,clutch ,pulse width modulator etc. More than 0.5 meters
5: to the power line and cable must be separate in order to reduce noise in series

6 Operating Procedures

WARNING

Please be careful to operate the machine while saw blade is running and always DO NOT to use the machine unless all of the guards and other safety devices are in good working order.

6.1 Machine Start and Stop

The switch's positon of the machine is as the picture shown.

A-Deflection display panel
B-Main blade start button
C-Main blade stop button
D-Scoring blade start button
E-Scoring blade stop button
F-Main blade deflection rotary knob
G-Main blade rise and fall rotary knob
H-Emergency stop button
I-Indicator light

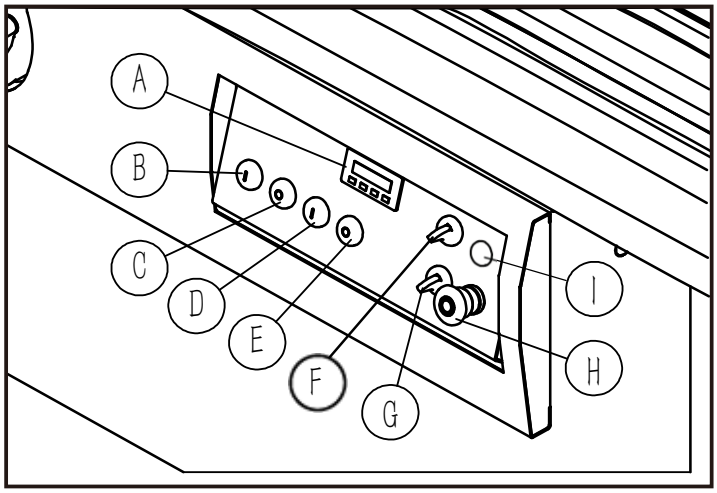

Fig.6.1

6.2 Working Station

WARNING

The machine has been designed to be used by one operator only. Plastic pusher shall be used when cutting small workpieces and in circumstances where it is necessary to push the workpiece against the fence.

A - Working with the sliding table (squaring)
B - Parallel cut side

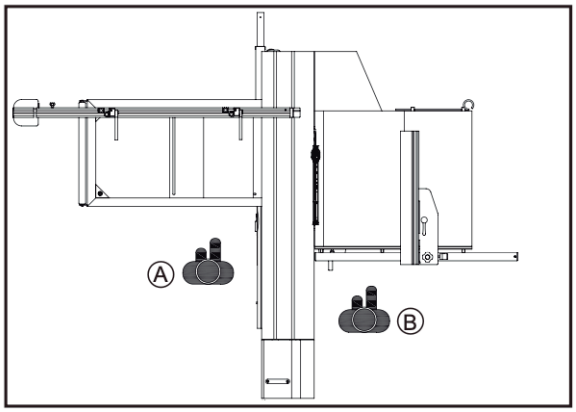

Fig.6.2

6.3 Working with the Machine

The choice of the method to use to make a cut
with the circular saw depends on the dimensions of the wood to be machined and the type of machining to be carried out. For cutting ennobled wood, use of the engraver is indispensable to prevent chipping.When the engraver is not needed,lower it completely underneath the table.

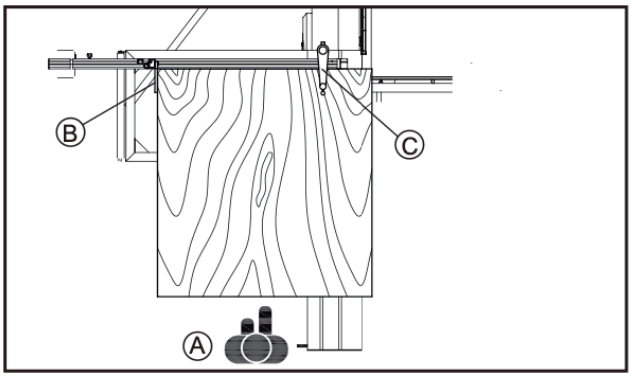

Fig.6.3.1

6.3.1 Working with the Sliding Table

- Put workpiece on the sliding table. Fix it with the aluminium stoper B and gripping arm C.
- Stand on position A, push the operating lever which is on sliding table forward to across blade.

6.3.2 Working with Rip Fence

- Lock the sliding table. Put the workpiece against the side surface of rip fence. Push the workpiece forward across blade.
- For your safety, please use the plastic push block.
- When cutting off a small workpiece, please use the push stick to prevent accident cutting of hands.

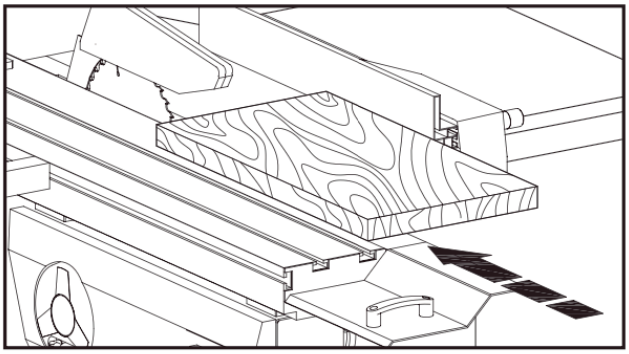

Fig.6.3.2

6.4 Correct Use for this Machine

- First make sure that the machine does not vibrate.Do not try to take off the material when the cut has already started; proceed with a continuous and uniform speed. Workpiece feeding towards the blade (especially where there are knots) should not be too fast (feeding speed should be in accordance with workpiece thickness). Do not let workpieces stop between the saw fence and the blade.
- Avoid contact of the tips against metallic objects. When necessary sharpen the saw blade.Often clean the steel body and the tips with proper liquid products. Let the saw blade in the bath, then clean it with brush: don't use metallic brushes. As regards the toothing at least 2-3 teeth shall cut at the same time A. If only one tooth cuts B, you don't get a good cutting. Whenever this is possible, it is also critical to lift the blade until the whole tooth cutting part protrudes from the wood thickness.

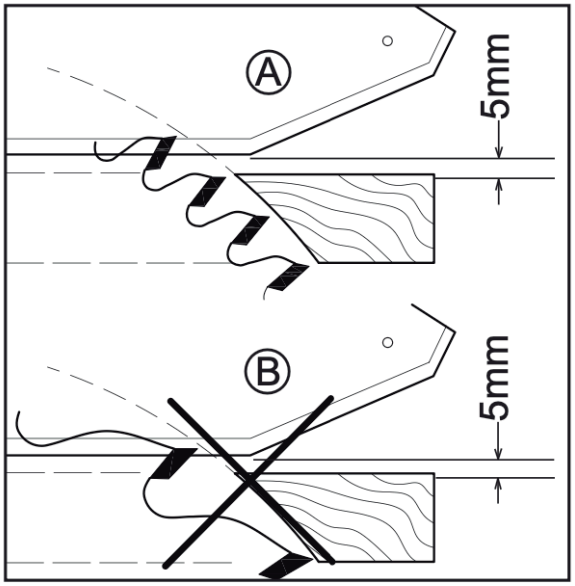

Fig.6.4

WARNING

Before touching the machine parts, ensure to turn OFF the main switch and disconnect the general power supply.

7 Maintenance

WARNING

Disconnect the general power supply before doing any maintenance.

7.1 Replace Saw Blade

WARNING

Only correctly sharpened saw blades manufactured in accordance with the requirements of EN 847-1:2005 shall be used. Don't use the saw blade whose maximum marked speed is lower than the maximum rotational speed of the saw spindle. Please always keep the gap between the riving knife and the saw blade to be at least 3mm and not exceed 8mm.

7.1.1 Saw Blade

- Rotate the blade lifting handwheel to move the blade to toppest position.
- Take out the blade guard A.
- Push the sliding table to backmost position.
- Open the blade cover D.
- Unscrew the nut C to take out the blade for replacement.

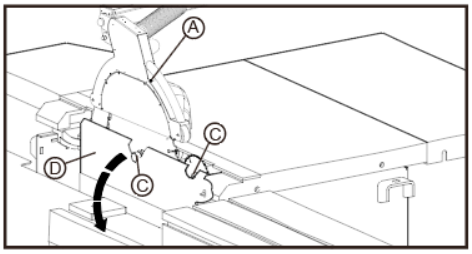

Fig.7.1.1

7.1.2 Dado blade

- Rotate the blade lifting handwheel to move the blade to toppest position.
- Take out the blade guard A.
- Push the sliding table to backmost position.
- Remove the middle panel B.
- Open the blade cover D,Remove the riving knife I.
- Remove the inner and outer saw blade clamps E/F.
- Install the shaft sleeve G on the main shaft.
- Install the dado blade on the main shaft.
- Install the washer H on the main shaft if necessary.
- Install nut C on the spindle and tighten it

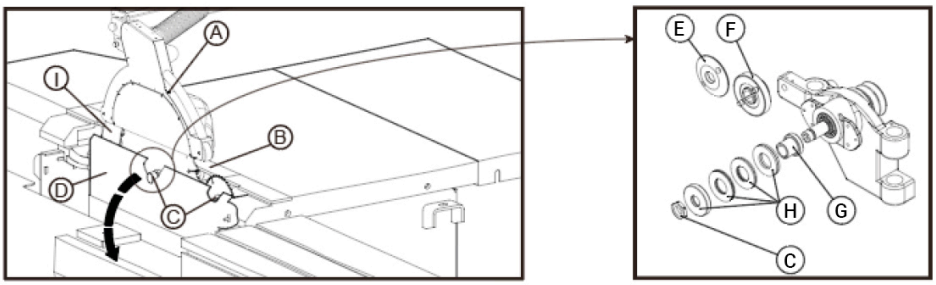

Fig.7.1.2

7.2 Overall Cleaning

WARNING

Please DO NOT to try removing chips while the saw blade is running.

After each working cycle, thoroughly clean the machine and all of its parts, vacuum the shavings and dust and remove any resin residues.

Use compressed air only when strictly necessary, using protective glasses and a mask.

In particular, clean the following parts:

- the sliding table rail A;
- the sliding support extension B;

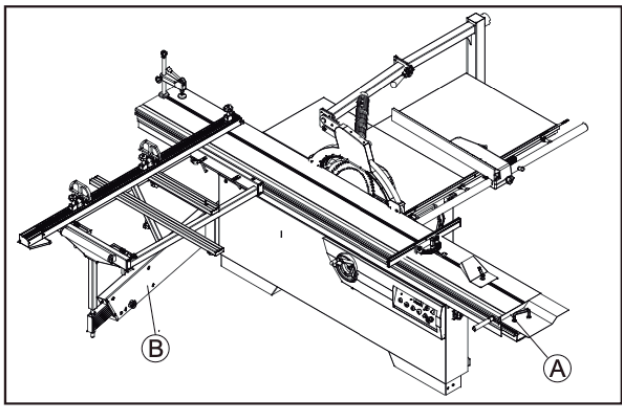

Fig.7.2

7.3 General Lubrication

- Weekly clean and lubricate all the mobile couplings of the machine A with a thin film of oil and grease.
- Protect all belts and pulleys to avoid contamination with oil.

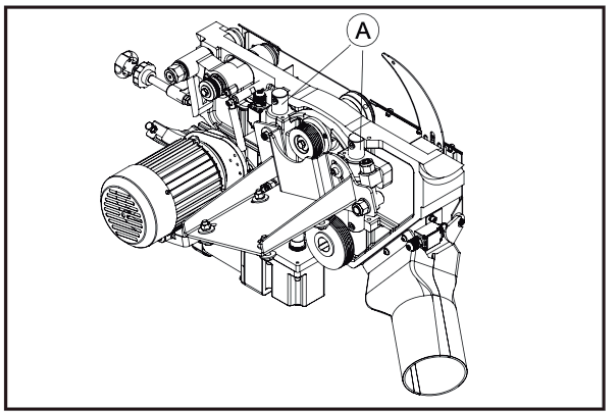

Fig.7.3

7.4 Replacement and Disposal

Should replacement become necessary, the machine parts must be replaced with original components in order to guarantee their efficiency.

The replaced parts must be disposed of in compliance with the laws in force in the country of use.

Component replacement requires specific training and technical skills; for this reason, the above interventions must be carried out by qualified personnel to prevent damage to the machine and risks to the safety of persons.

CAUTION

In case of mechanical or functional faults in the machine, including guards or tools, please call the local authorized agent for technical assistance and maintenance.

Any maintenance must be only done when the machine is isolated from all energy sources (plug out).

8 Trouble Shooting

WARNING

- For any information or problem contact your area dealer or our technical service center. The necessary interventions must be carried out by specialised technical personel.
- Before carrying out any fault service or maintenance work, please always TRUN OFF THE SWITCH, UNPLUG POWER CABLE, WAIT FOR SAW BLADE TO COME TO STANDSTILL.

Trouble	Possible Cause	Solution
Saw stops or will not start	1. Overload tripped on motor 2. Saw unplugged from wall or motor 3. Fuse blown or circuit breaker tripped 4. Cord damaged	1. Allow motor to cool and reset overload switch on motor 2. Check all plug connections 3. Replace fuse or reset circuit breaker 4. Replace cord
Does not make accurate 45° or 90° cuts	1. Stops not adjusted correctly 2. Angle pointer not set accurately	1. Check blade with square and adjust stops 2. Check blade with square and adjust pointer
Material binds blade when ripping	1. Fence not aligned with blade 2. Warped wood 3. Excessive feed rate 4. Splitter not aligned with blade	1. Check and adjust fence 2. Select another piece of wood 3. Reduce feed rate 4. Align splitter with blade
Saw makes unsatisfactory cuts	1. Dull blade 2. Blade mounted backwards 3. Gum or pitch on blade 4. Incorrect blade for cut 5. Gum or pitch on table	1. Sharpen or replace blade 2. Turn blade around 3. Remove blade and clean 4. Change blade to correct type 5. Clean table
Blade does not come up to speed	1. Extension cord too light or to long 2. Low shop voltage 3. Motor not wired for correct voltage	1. Replace with adequate size cord 2. Contact your local electrical company 3. Refer to motor junction box
Saw vibrates excessively	1. Stand on uneven floor 2. Damaged saw blade 3. Bad V-belts 4. Bent pulley 5. Improper motor mounting 6. Excessive play in raising mechanism 7. Loose hardware	1. Reposition on flat, level surface 2. Replace saw blade 3. Replace V-belts 4. Replace pulley 5. Check and adjust motor 6. Adjust worm and arbor bracket 7. Tighten hardware
Rip fence binds on guide rails	1. Guide rails or extension wing not installed correctly 2. Guide of rip fence not adjusted properly	1. Reassemble guide rails, refer to fence manual 2. Adjust guides, refer to fence manual
Material kicked back from blade	1. Rip fence out of alignment 2. Splitter not aligned with blade 3. Feeding stock without rip fence 4. Splitter not in place 5. Dull blade 6. Letting go of material before it is past blade 7. Anti-kick back plates dull	1. Align rip fence with miter slot 2. Align splitter with blade 3. Install and use rip fence 4. Install and use splitter (with guard) 5. Replace blade 6. Push material all the way past blade before releasing work 7. Replace or sharpen anti-kick back plates
Blade does not raise or tilt freely	1. Too much tension in raising mechanism 2. Sawdust and debris in raising and tilting mechanisms	1. Adjust raising worm and arbor bracket 2. Clean and regrease

9 Exploded View

Frame Assembly - SHEET A

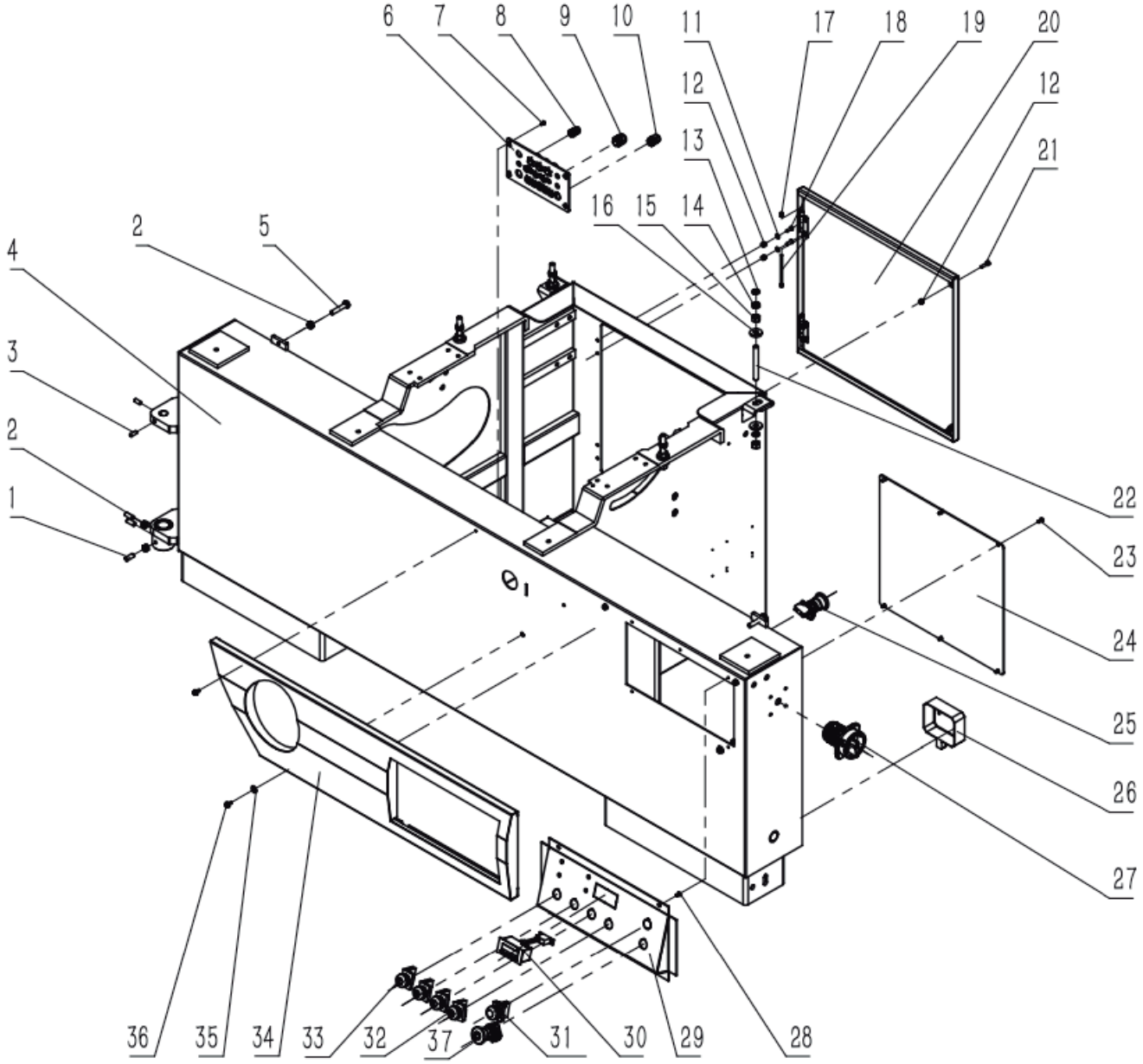

Frame Assembly - SHEET A

Item	Parts Name	Part No
1	SCREW M10	M10X25GB77B
2	Nut M10	M10GB6170Z
3	SCREW M8	M8X20GBGB80B
4	FRAME	JXPS1205011000M
5	BOLT M10	M10X50GB5781Z
6	THREAD PLATE	JXPS1602010004B
7	SCREW M5	M5X10GB70D2Z
8	FIXED JOINT M12	JL91046200
9	FIXED JOINT M20	JXSM0401010003
10	FIXED JOINT M16	JXSM0401010004
11	WASHER	WSH6GB97D1Z
12	LOCK NUT M6	M6GB6170889D1Z
13	WASHER	WSH12GB93Z
14	HEXAGON NUT	M12GB6172D1Z
15	NUT M12	M12GB6170Z
16	WASHER	SCPS1601010004
17	LOCK NUT M5	M5GB889D1Z
18	HEXAGON SOCKET SCREW M6	M6X16GB70D2Z

Item	Parts Name	Part No
19	SCREW M5	M5X70GB70D1B
20	REAR PLATE	JXPS1201010002C
21	SCREW M6	M6X20GB70D1Z
22	SCREW M12	M12X100GB77B
23	SCREW M6	M6X12GB70D2Z
24	COVER PLATE	JXPS1205010001
25	EMERGENCY SWITCH	M22-DRP-R-K01
26	WIRING BOX	JXPS1205090009
27	CHANGE-OVER SWITCH	ZH-HD-2-01
28	SCREW M6	M6X10GB70D2Z
29	SWITCH PLATE	JXPS1205013000A
30	DIGITAL DISPLAY DEFLECTION	M30A
31	INDICATOR LIGHT	AD16
32	STOP BUTTON	M22-D-S-X0-K01
33	START BUTTON	M22-D-W-X1-K10
34	FRONT COVER	JXPS1205012100C
35	WASHER	WSH6GB96D1Z
36	FLANGE BOLT	M6X12GB5789Z
37	KNOB	M22-WK3-K20

Spindle Assembly - SHEET B

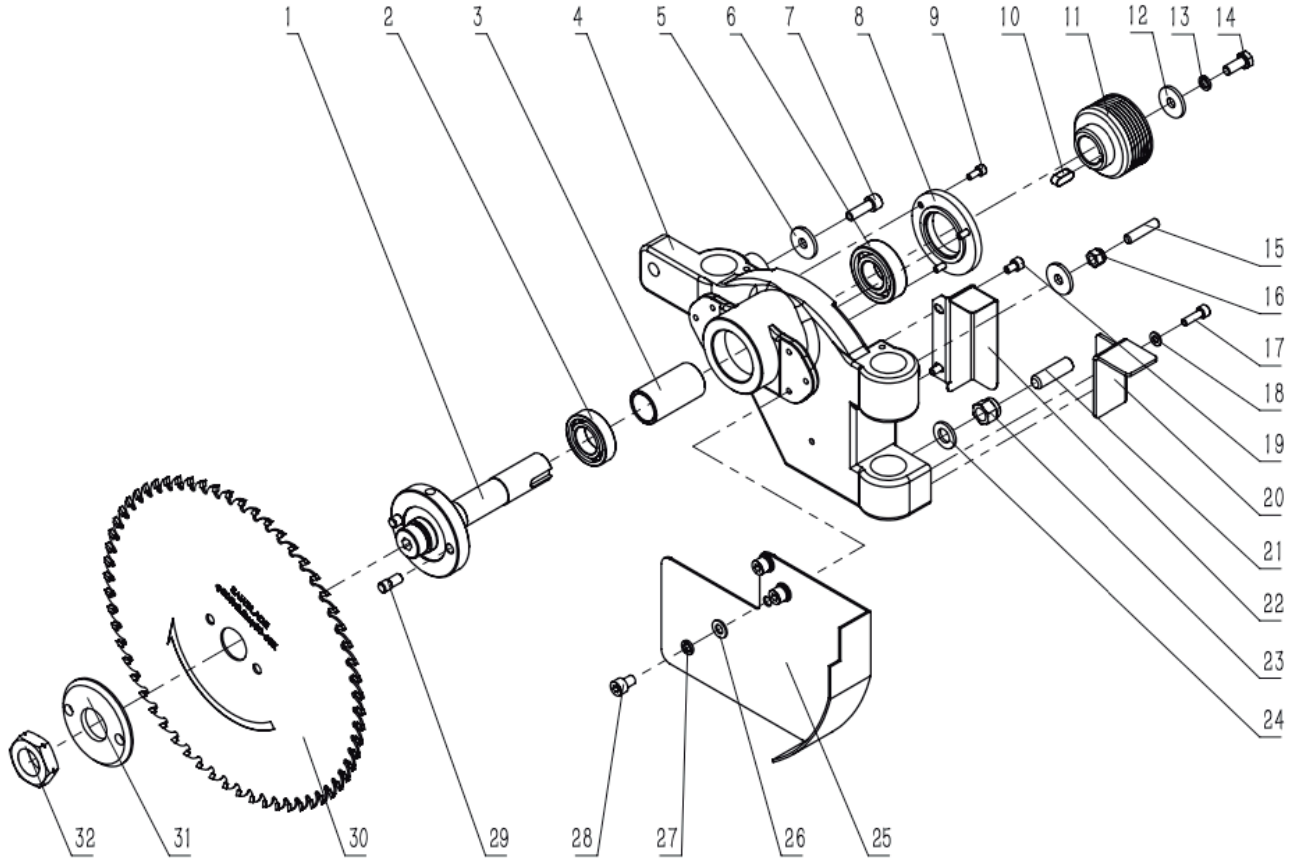

Spindle Assembly - SHEET B

Item	Parts Name	Part No
1	Dado component	JXPS1201120000
2	BEARING	BRG6005-2RSHGB276SKF
3	SLEEVE	JXPS1201021007
4	MAIN SHAFT SEAT	JXPS1205021001
5	BIG WASHER 8	WSH8GB5287Z
6	SCREW M8X25	M8X25GB70D1Z
7	BEARING	BRG6205-DDUC3GB276
8	BEARING END COVER	JXPS1205021010
9	SCREW M5	M5X12GB70D1Z
10	FLAT KEY	PLN8X7X20GB1096
11	MAIN SHAFT PULLEY WHEEL	JXPS1201021009B
12	BIG WASHER 8	WSH8GB5287Z
13	SPRING WASHER 8	WSH8GB93Z
14	SCREW M8	M8X20GB5783Z
15	SCREW M8X35	M8X35GB77B
16	LOCKNUT M8	M8GB889D1Z
17	SCREW M6X20	M6X20GB70D1Z

Item	Parts Name	Part No
18	WASHER 6	WSH6GB97D1Z
19	SCREW M6X20	M6X10GB70D1Z
20	LIMIT PLATE	JXPS1205091007
21	SCREW 12	M12X50GB77B
22	SCREW DUST COVER	JXPS1205020005
23	LOCKNUT M8	M12GB889D1Z
24	FLASH WASHER	WSH12GB97D1Z
25	AIR DEFLECTOR	WSH8GB97D1Z
26	FLAT WASHER 8	WSH8GB93Z
27	SPRING WASHER 8	WSH8GB93Z
28	SCREW M8	M8X12GB70D1Z
29	LOCATION PIN	JXPS1201021003
30	MAIN SAW BLADE	JXPS1201021004
31	SAW BLADE CLIP	JXPS1201021002
32	LOCK NUT	JXPS1201021001

With knife plate Assembly - SHEET C

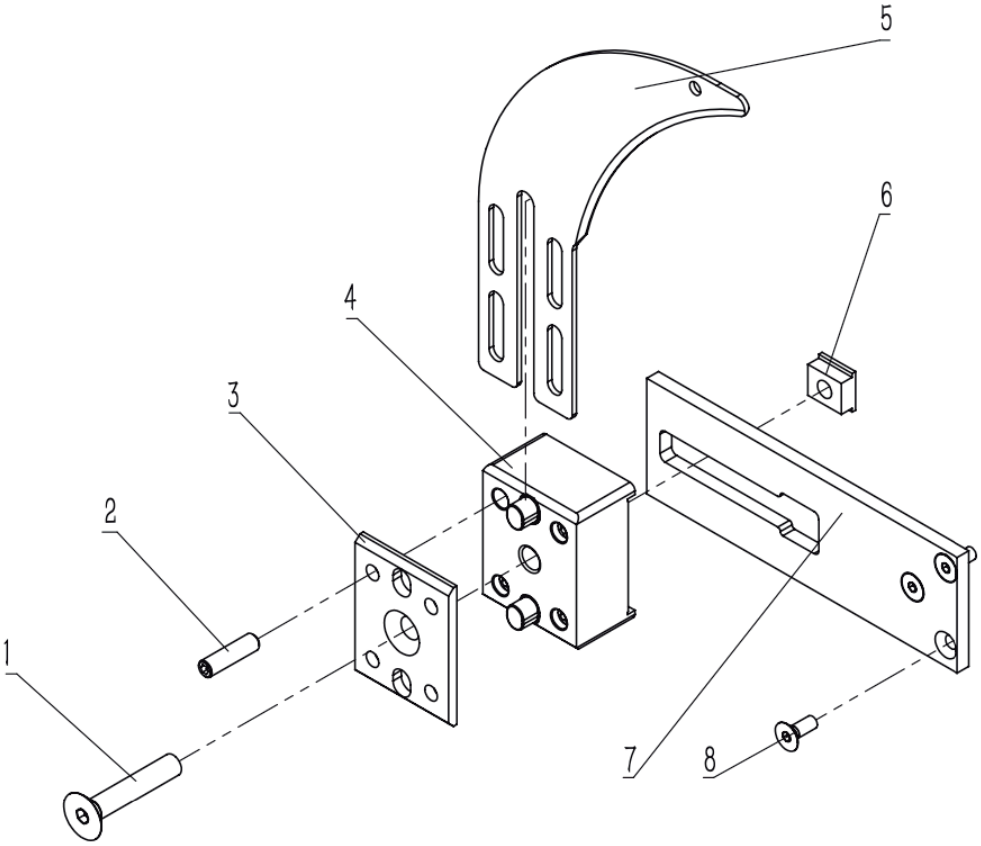

Item	Parts Name	Part No	Qty.
1	SCREW M10	M10X55GB70D3Z	1
2	SCREW M8	M8X25GB77B	4
3	RIVING KNIFE LOCKING PLATE	JXPS1201028008A	1
4	RIVING KNIFE ADJUSTING PLATE	JXPS1205028007	1
5	RIVING KNIFE	JXPS1201028001A	1
6	RIVING KNIFE LOCKING BLOCK	JXPS1201028005	1
7	RIVING KNIFE SEAT	JXPS1205028002	1
8	SCREW M8	M6X16GB70D3Z10D9	3

Motor Assembly - SHEET D

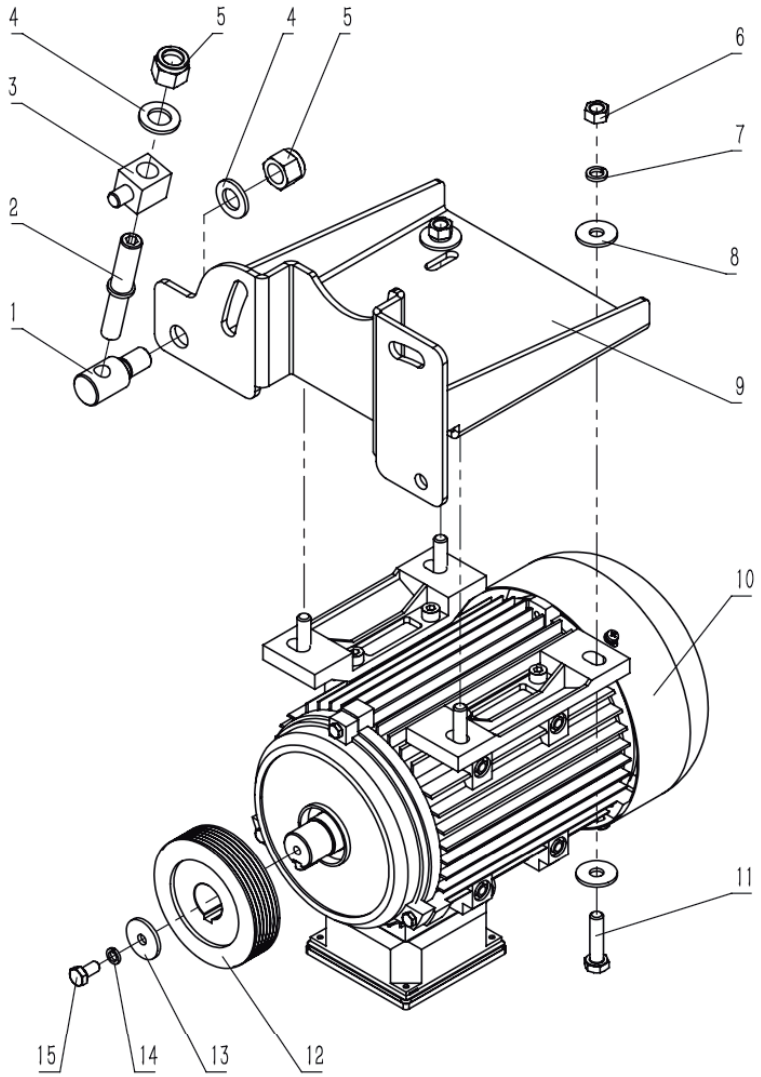

Item	Parts Name	Part No	Qty.
1	ADJUSTING NUT	JXPS1205023005	1
2	SCREW	JXPS1201023006B	1
3	TENSION BLOCK	JXPS1201023004B	1
4	FLAT WASHER 16	WSH16GB97D1Z	2
5	NUT M16	M16GB889D1Z	2
6	NUT M8	M8GB6170Z	4
7	SPRING WASHER 8	WSH8GB93Z	5
8	BIG WASHER 8	WSH8GB96D1Z	8

Item	Parts Name	Part No	Qty.
9	MOTOR SEAT ASSY	JXPS1205023002A	1
10	1 PH MOTOR	YLA903302A	1
	3 PH MOTOR	YSA105402	1
11	Bolt M10	M8X30GB5783Z	4
12	1PH MOTOR WHEEL	JXPS1201023001F	1
	3PH MOTOR WHEEL	JXPS1201023001G	1
13	WASHER	JXPS1202070005	1
14	LEFT-HANDED SCREW	JL82080003	1

Pre-Cut motor Assembly - SHEET E

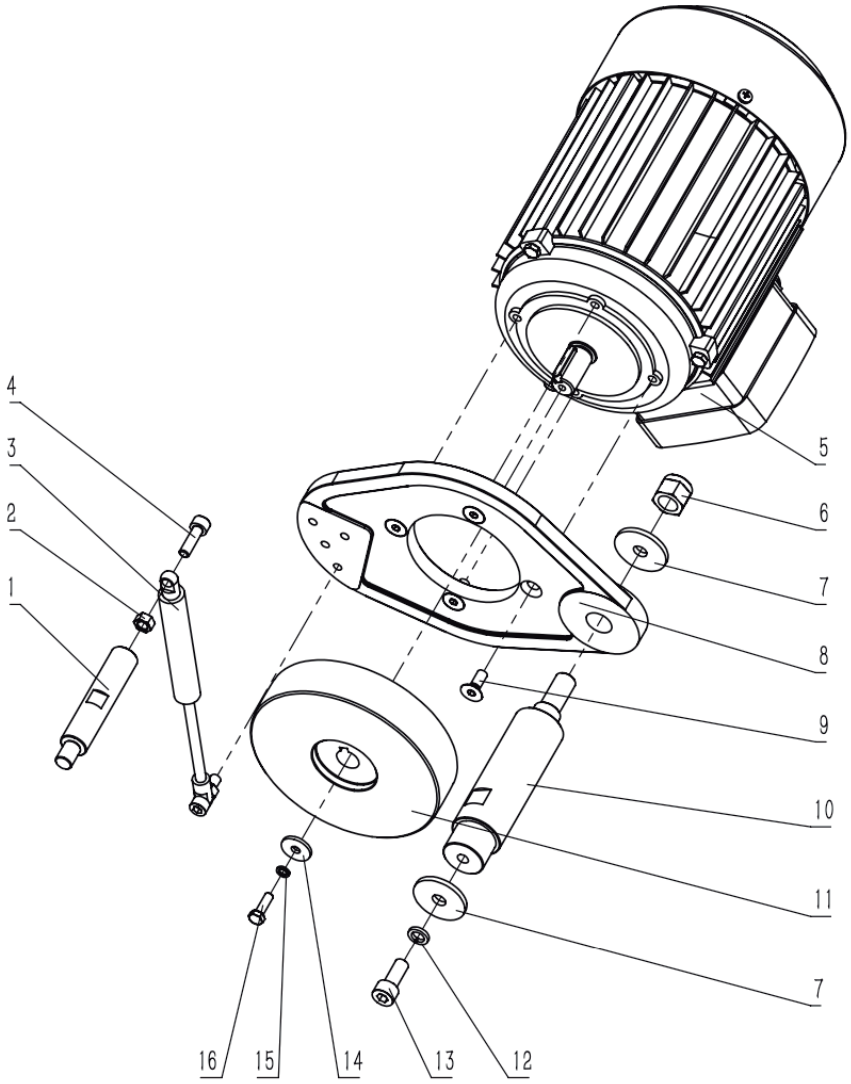

Item	Parts Name	Part No	Qty.
1	GAS SPRING SUPPORT SHAFT	JXPS1201024008C	1
2	THIN NUT M6	M6GB6172D1Z	1
3	GAS SPRING	JXPS1201020013B	1
4	NUT M6X20	M6X20GB70D1Z	2
5	1 PH MOTOR	YYH713082	1
	3 PH MOTOR	YSH715082	1
6	NUT M12	M12GB889D1Z	1
7	WASHER	JXPS1202070005	2
8	SCORING MOTOR PLATE	JXPS1205024002	1

Item	Parts Name	Part No	Qty.
9	SCREW M6X16	M6X16GB70D3Z	4
10	SUPPORTING SHAFT	JXPS1205024005	1
11	SCORING MOTOR WHEEL	JXPS1201024001E	1
12	SPRING WASHER	WSH8GB93Z	1
13	SCREW M8X20	M5X16GB5783Z	1
14	SPRING WASHE	WSH5GB5287	1
15	SPRING WASHER 5	WSH5GB93Z	1
16	BOLT M5X16	M5X16GB5783Z	1

Pre-cutting adjustment Assembly - SHEET F

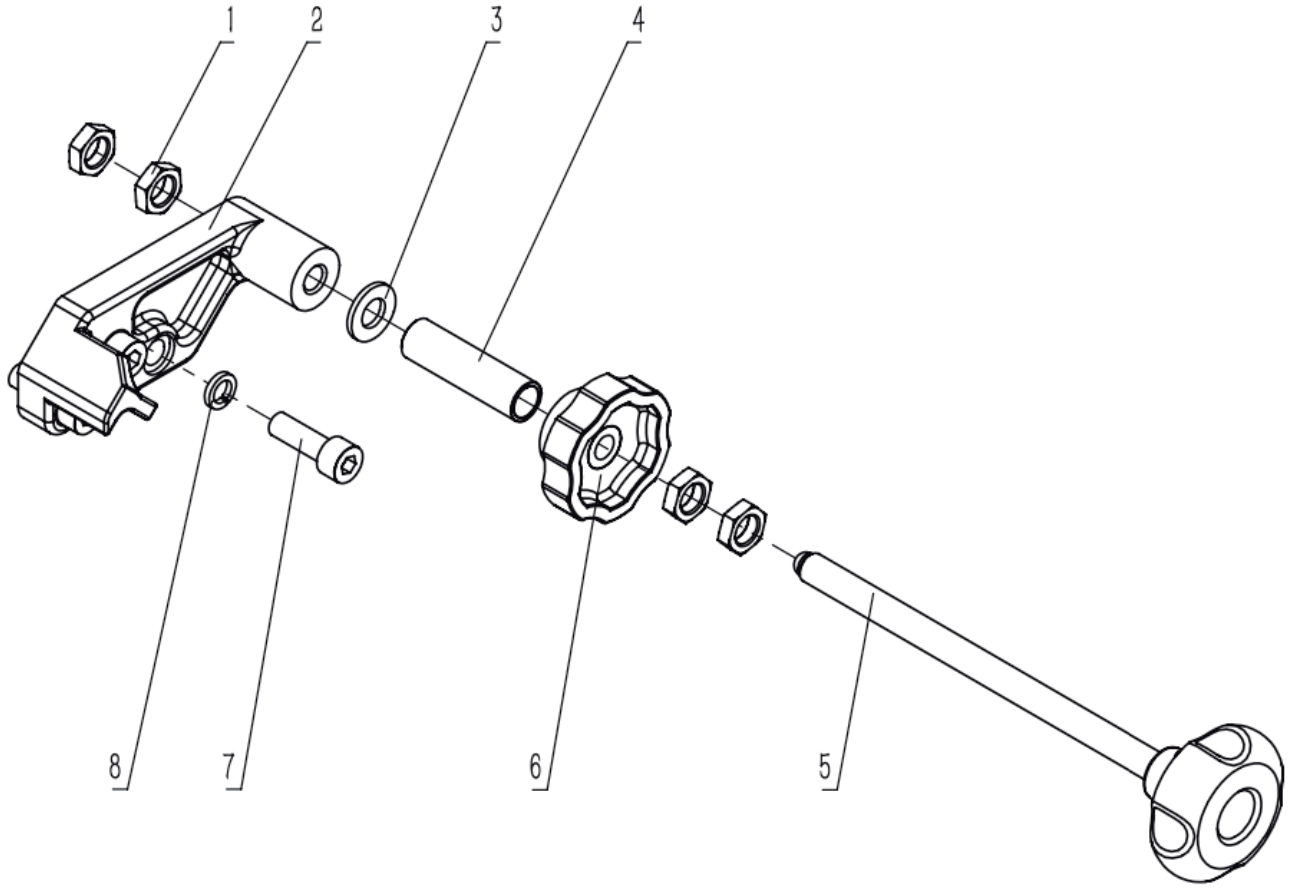

Item	Parts Name	Part No	Qty.
1	NUT M10	M10GB6172D1Z	4
2	SCORING ADJUSTING SEAT	JXPS1205027002	1
3	FLAT WASHER 10	WSH10GB97D1Z	2
4	BUSHING	JXPS1201027001A	1
5	LOCK HANDLE ASSY	JXPS1201027100	1
6	LOACK WHEEL	JXTS1201028004	1
7	SCREW M8X25	M8X25GB70D1Z	3
8	SPRING WASHER 8	WSH8GB93Z	3

Pre-Cut shaft seat Assembly - SHEET G

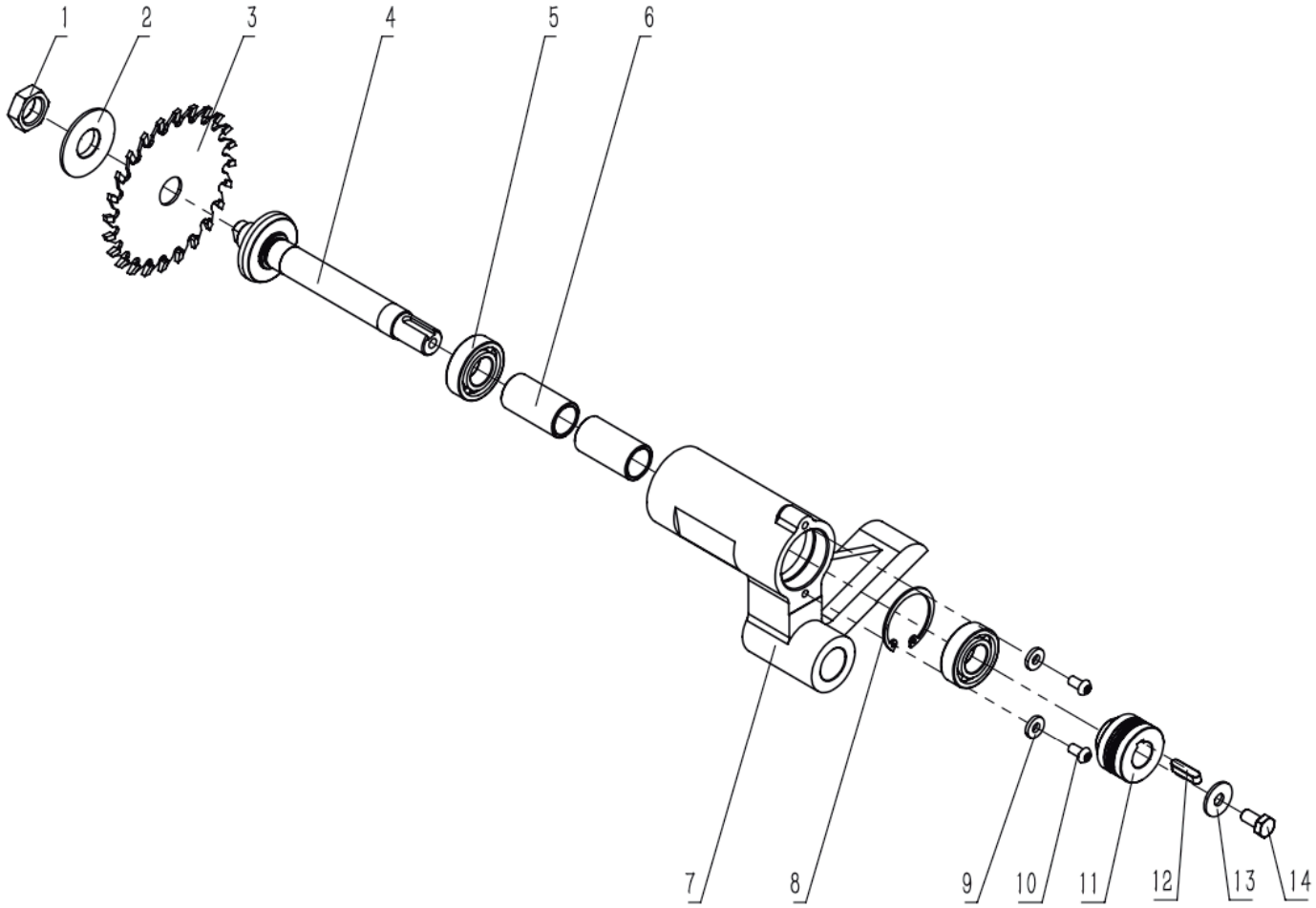

Item	Parts Name	Part No	Qty.
1	NUT M16	M18GB6173Z	1
2	SCORING SAW BLADE CLIP	JXPS1201022002	1
3	SLOTTED SAW BLADE	JXPS1201022003	1
4	SCORING MAIN SHAFT	JXPS1201022004C	1
5	BEARING	BRG6004-2NSE	2
6	SLEEVE	JXPS1201022008A	2
7	SCORING SHAFT SEAT	JXPS1205022005	1

Item	Parts Name	Part No	Qty.
8	SNAP RING	CLP42GB893D1B	1
9	SPACER	JXBS1603010003	2
10	SCREW M6X12	M6X12GB70D2Z	2
11	SCORING MAIN SHAFT WHEEL	JXPS1201022009D	1
12	FLAT KEY	PLN6X6X25GB1096	1
13	BIG WASHER 8	WSH8GB96D1Z	1
14	LEFT-HANDED SCREW	JL82080003	1

Main saw lift Assembly - SHEET H

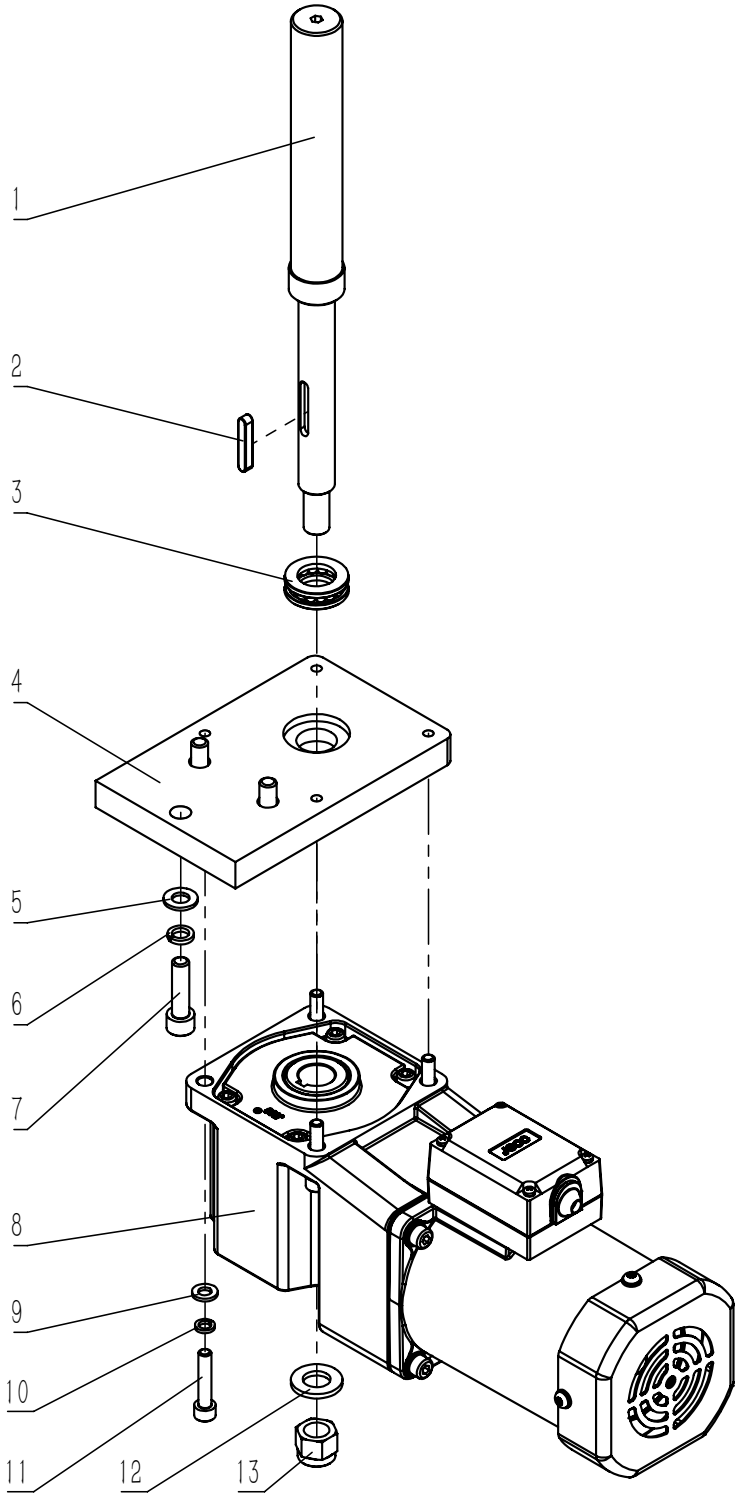

Main saw lift Assembly - SHEET H

Item	Parts Name	Part No
1	LIFTING SCREW ROD	JXPS1205026401
2	FLAT KEY	PLN5X5X30GB1096
3	THRUST BALL BEARING	BRG51103GB301
4	BRACKET FOR MOTOR	JXPS1205026013
5	FLAT WASHER 8	WSH8GB97D1Z
6	SPRING WASHER 8	WSH8GB93Z
7	SCREW M8X30	M8X30GB70D1Z
8	GEAR MOTOR	90YS120GV22-90GKF15RC
9	FLAT WASHER 6	WSH6GB97D1Z
10	SPRING WASHER 6	WSH6GB93Z
11	SCREW M6X30	M6X30GB70D1Z
12	FLAT WASHER 12	WSH12GB97D1Z
13	NUT M12	M12GB889D1Z

Rotational support seat Assembly - SHEET I

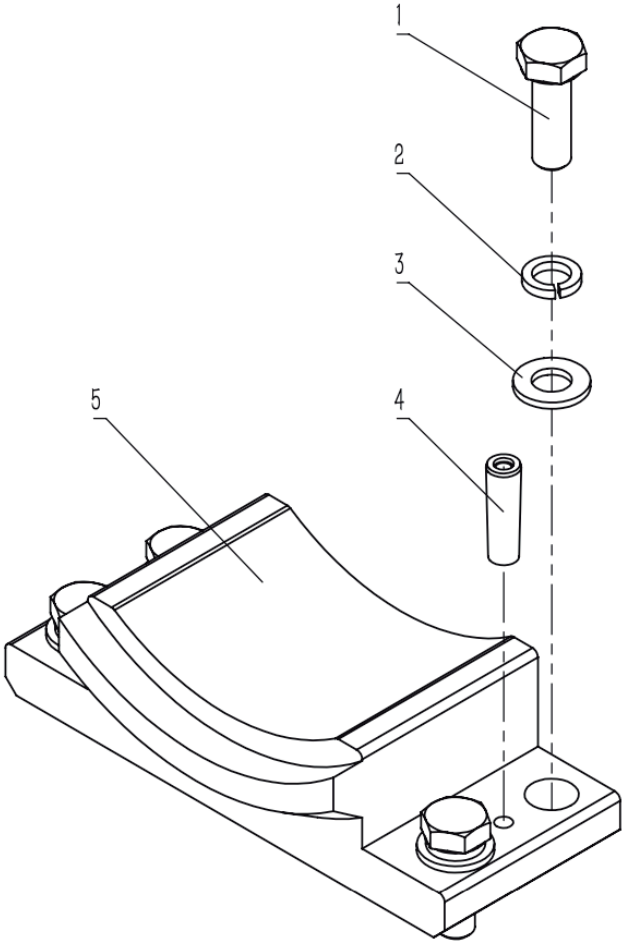

Item	Parts Name	Part No	Qty.
1	BOLT M10X30	M10X30GB5783Z	4
2	SPRING WASHER 10	WSH10GB93Z	4
3	WASHER 10	WSH10GB97D1Z	4
4	TAPER PIN 8X30	PIN8X30GB118Z	2
5	ROTARY SUPPORT SEAT	JXPS1201020002E	1

Core Assembly - SHEET J

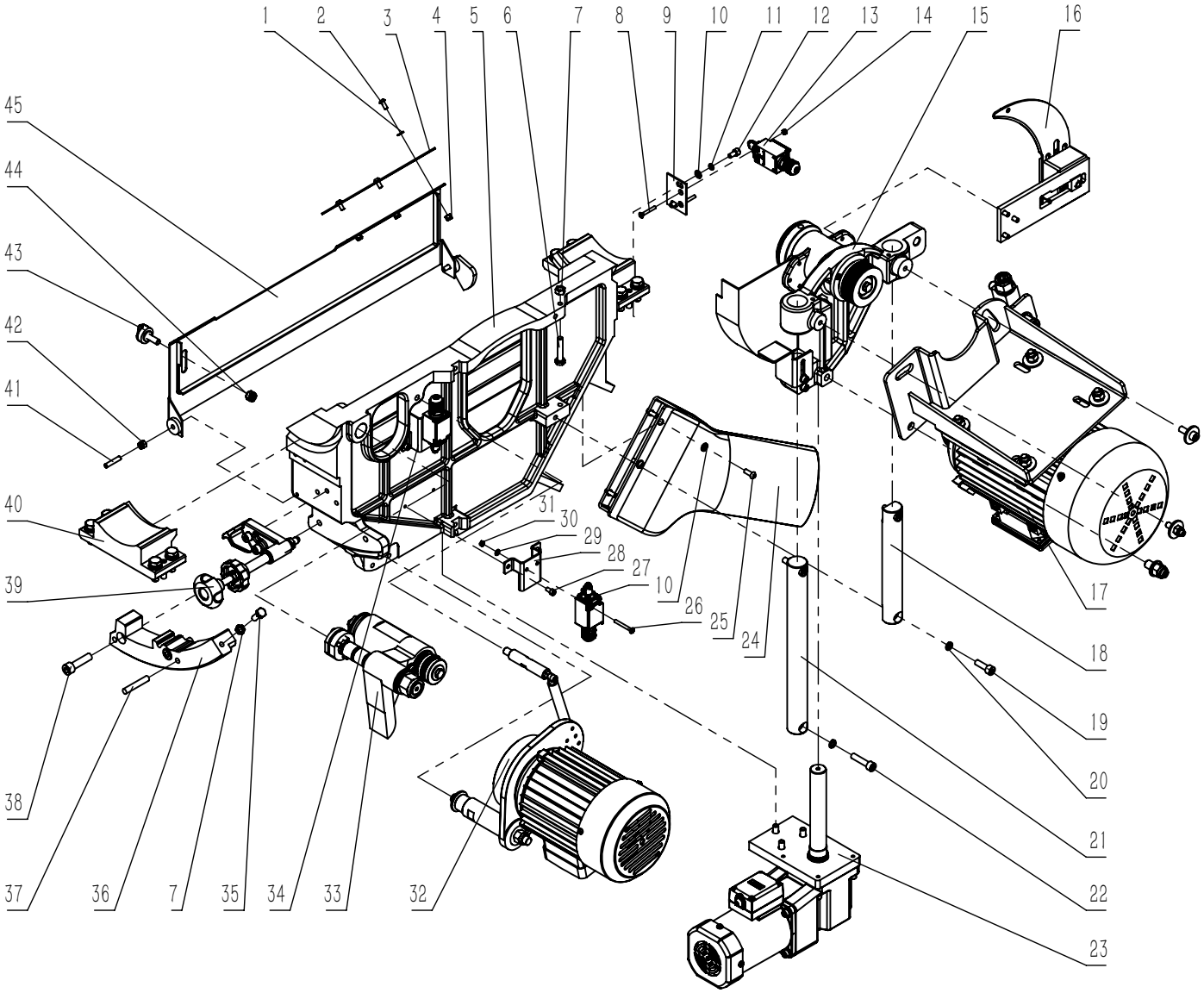

Core Assembly - SHEET J

Item	Parts Name	Part No
1	WASHER 5	WSH5GB97D1Z
2	SCREW M5X12	M5X12GB70D2Z
3	DUST GUARD	JXPS1201020103
4	LOCKNUT M5	M5GB889D1Z
5	RACK	JXPS1205020001
6	BOLT M8X40	M8X40GB5783Z
7	NUT M8	M8GB6170Z
8	SCREW M4X30	M4X30GB819D1Z
9	TRAVEL SWITCH BOARD	JXPS1201020011
10	WASHER 6	WSH6GB97D1Z
11	SPRING WASHER 6	WSH6GB93Z
12	SCREW M6X12	M6X12GB70D1Z
13	SAFETY SWITCH	QKS7-01
14	NUT M4	M4GB6170Z
15	SHAFT SEAT ASSY	JXTS1205021000C
16	RIVING KNIFE ASSY	JXPS1205028000
17	MOTOR ASSY	JXTS1205023000C
18	GUIDE RAIL 1	JXPS1205020003
19	NUT M8X25	M8X25GB70D1Z
20	SPRING WASHER 8	WSH8GB93Z
21	GUIDE RAIL 2	JXPS1205020004
22	NUT M8X35	M8X35GB70D1Z
23	MAIN SAW LIFTING ASSY	JXPS1205026000

Item	Parts Name	Part No
24	DUST HOSE	FDPS1201020009
25	SCREW M6X16	M6X16GB70D2Z
26	SCREW M4X35	M4X35GB818Z
27	SAFETY SWITCH	QKS7-01
28	SCREW M5X10	M5X10GB70D1Z
29	MICRO SWITCH SEAT 2	JXPS1205091005
30	FLAT WASHER 4	WSH4GB97D1Z
31	NUT M4	M4GB6170Z
32	SCORING MOTOR ASSY	JXPS1205024000B
33	SCORING SHAFT SEAT ASSY	JXPS1205022000B
34	MICRO SWITCH SEAT	JXPS1205091004
35	BOLT M8X20	M8X20GB5781Z
36	WORM WHEEL	JXPS1205026004
37	TAPER PIN 8X50	PLN8X50GB117Z
38	SCREW M10X40	M10X40GB70D1Z
39	LOCK HANDLE ASSY	JXPS1205027000
40	ROTARY SUPPORT SEAT ASSY	JXPS1201021200
41	SCREW M6X30	M6X30GB77B
42	LOCKNUT M6	M6GB889D1Z
43	LOCK HANDLE ASSY	M8X25GB12Z
44	LOCKNUT M8	M8GB889D1Z
45	BLADE GUARD	JXPS1205020100A

Deflection worm Assembly - SHEET K

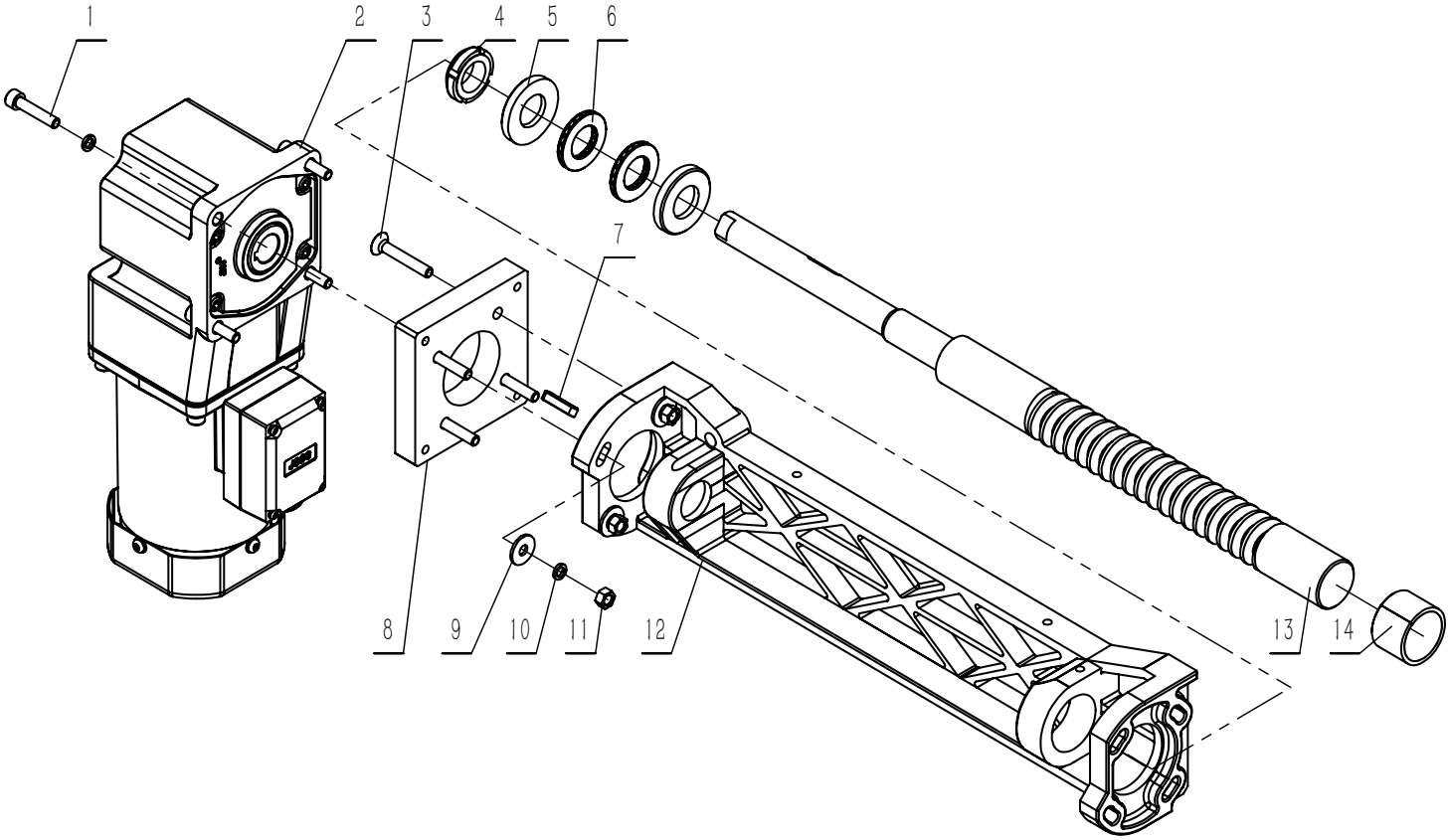

Item	Parts Name	Part No	Qty.
1	TILTING MOTOR SEAT	M6X30GB70D1Z	4
2	MOTOR	90YS120GV22-90GKF15RC	1
3	SPRING WASHER	M6X40GB70D3Z	4
4	HEX NUT	0000301849F	1
5	SHAFT SEAT	WSH20GB97D1Z	1
6	WORM	BRG2035AXKASGB4605	2
7	ROLL SHAFT SLEEVE	PLN5X5X25GB1096D1	1

Item	Parts Name	Part No	Qty.
8	HEX SOCKET HEAD SCREW	JXPS1602027018C	1
9	BIG WASHER	WSH6GB97D1Z	8
10	HEX SUNK SCREW	WSH6GB93Z	12
11	ROUND NUT M20X1	M6GB6170Z	4
12	WASHER	JXPS1602027004	1
13	BEARING	JXPS1205026201A	1
14	FLAT KEY	P30X35X24GB12613	1

Table Assembly - SHEET L

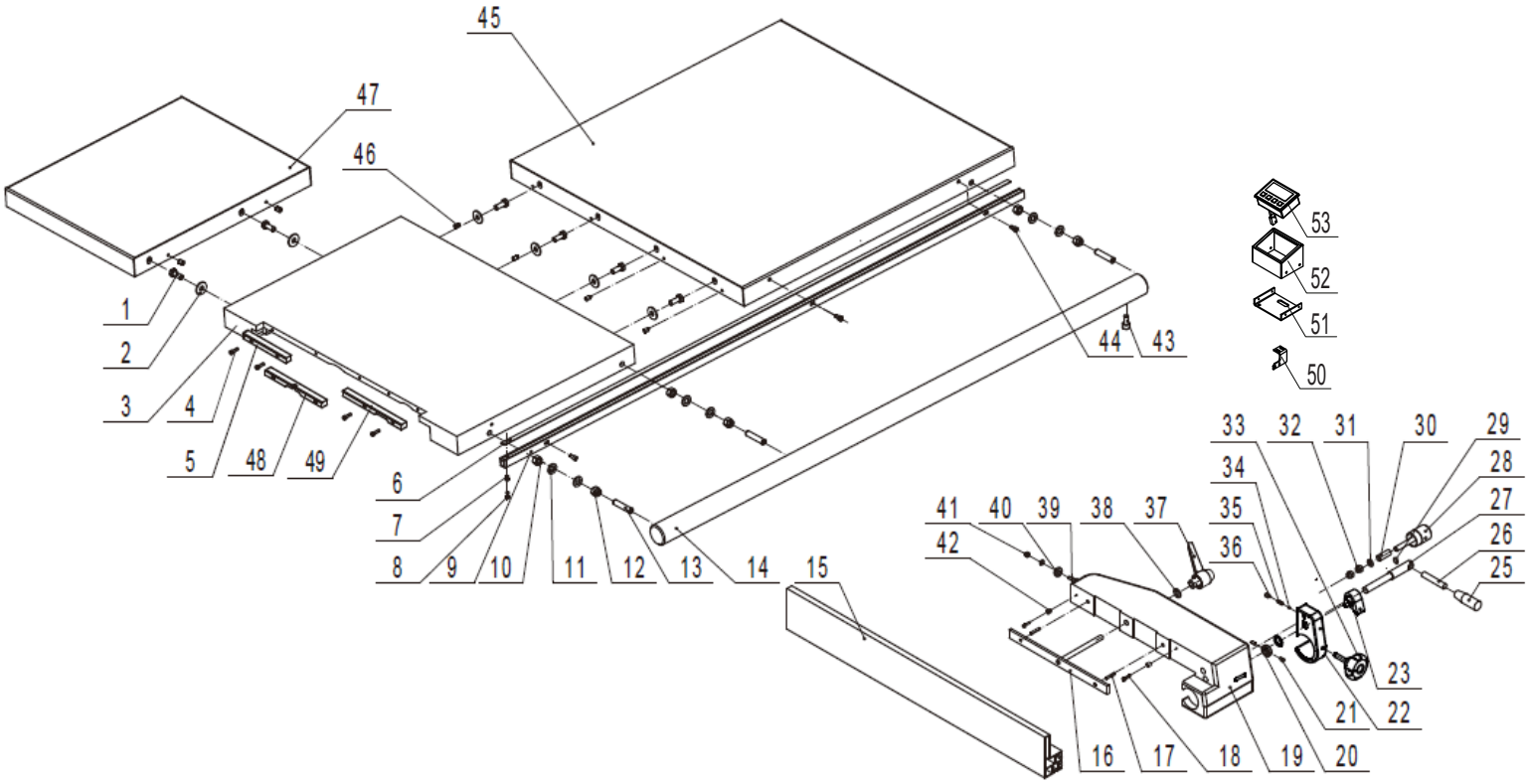

Table Assembly - SHEET L

Item	Parts Name	Part No	QTY.
1	BOLT	M10x25GB5783Z	6
2	FLAT WASHER	WSH10GB96Z	6
3	MAIN TABLE	JXPS1205030001	1
4	SCREW	M5x16GB70Z	6
5	TABLE INSERT 1	JXPS1201030002A	1
6	RULER	JXPS1201060003G /XD-U-05	1
7	NUT	M6X15GB/T17880D3Z	1
8	SCREW	M6X20GB70D1Z	1
9	BRACKET	JXPS1201060002D	1
10	HEX NUT	M16GB6170Z	3
11	FLAT WASHER	WSH16GB97D1Z	6
12	NUT	M16GB889D1Z	3
13	SCREW	JXPS1201060006	3
14	GUIDE RAIL	JXTS1201031002B	1
15	L SHAPED RIP FENCE	JXPS1201060004A	1
16	LOCK PLATE	JXPS1201061006B	1
17	ROLL PIN	PIN6X26GB879D1B	2
18	SCREW	M5X20GB70D1Z	2
19	FENCE SEAT	JXPS1201061001F	1
20	RING	JXPS1201061011A	1
21	LOCK SCREW	M4X6GB77B	2
22	MICRO ADJUSTMENT BRACKET	JXPS1201061002C	1
23	ECCENTRIC BUSHING	JXTS1205061003	1
25	HANDLE GLOOVE	JXPT1201020007-001S	1
26	LOCK ROD	SCPS1601061007	1

Item	Parts Name	Part No	QTY.
27	LOCK HANDLE ROD	JXPS1201061014C	1
28	MICRO ADJUSTMENT HANDLE	JXPS1201061010-001S	1
29	RING	CLP19GB894D1B	2
30	TUBE	JXPS1201061015	1
31	FLAT WASHER	WSH8GB97D1Z	2
32	NUT	M8GB6172Z	2
33	HANDLE	JXPS1201061017	1
34	STEEL BALL	8G10GB308	1
35	SPRING	JXPS1203023009	1
36	SCREW	M8X16GB77B	1
37	ADJUSTABLE HANDLE	KTSB-1-A-M10X80	1
38	FLAT WASHER	WSH10GB97D1Z	1
39	WHEEL	JXPS1201061200	1
40			
41			
42	TUBE	JXPS1602061006	2
43	SET SCREW	M5X10GB70Z	1
44	SET SCREW	M6X12GB70D2Z	4
45	RIGHT TABLE EXTENSION	JXPS1201033000	1
46	SCREW	M8X10GB77B	8
47	REAR TABLE EXTENSION	JXPS1201034000	1
48	TABLE INSERT 2	JXPS1201030002B	1
49	TABLE INSERT 3	JXPS1201030002C	1
50	FIXING PLATE	JXPS1201060009A	1
51	DISPLACEMENT	JXPS1201060008	1
52	MEASUREMENT	JXPS1602060007	1
53	DRO	MG10L-L180	1

Sliding Table Assembly - SHEET M

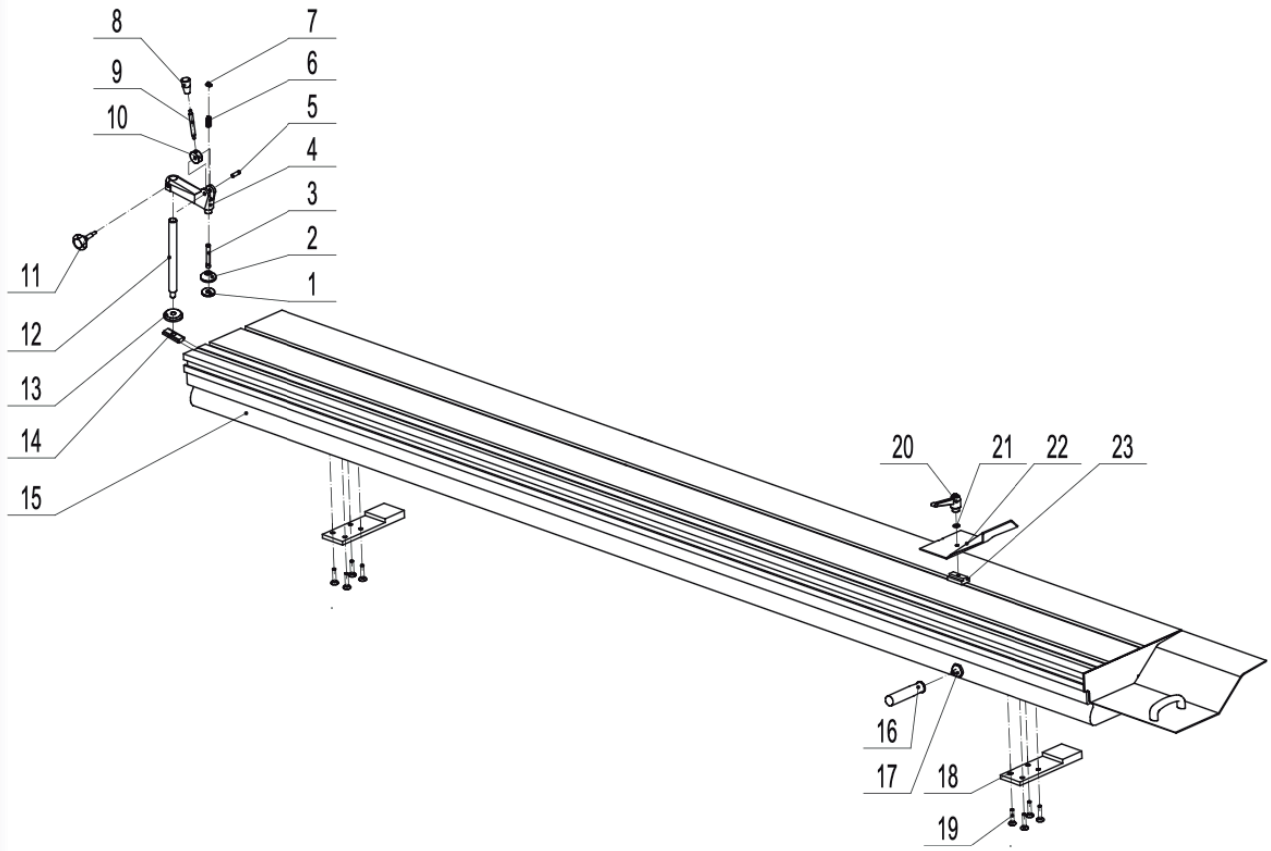

Item	Parts Name	Part No	Qty.
1	RUBBER FEET	JXSM0401042108	1
2	PLATE	JXSM0401042107-001S	1
3	ROD	JXSM0401042106	1
4	ROD	JXSM0401042101	1
5	SHAFT	JXSM0401042103	1
6	SPRING	JXSM0401042105	1
7	RETAINING RING	CLP12GB894D1B	1
8	HANDLE GLOOVE	JXPT1201020007-001S	1
9	HANDLE ROD	JXSM0401042104	1
10	CAM	JXSM0401042102	1
11	ROUND HANDLE	JXSM0401083002-001S	2
12	ROD	JXPS1201040005	1

Item	Parts Name	Part No	Qty.
13	PLATE	JXSM0401042001	1
14	SLIDE BRACKET	JXPS1205040004	1
15	SLIDE TABLE	JXPS1201041000F	1
16	HANDLE	JXPS1201040002A	1
17	HEX SLIDER	JXPS1201040001	1
18	SLIDE TABLE PLATE	JXPS1201040009	2
19	SET SCREW	M6X16GB70D3B	8
20	LOCK HANDLE	JXCM2501012100-001S	1
21	FLAT WASHER	JL26010017	1
22	PLATE	JXPS1201040003	1
23	SLIDER	JXPS1201040004B	1

SquareSlidingTableAssembly - SHEET N

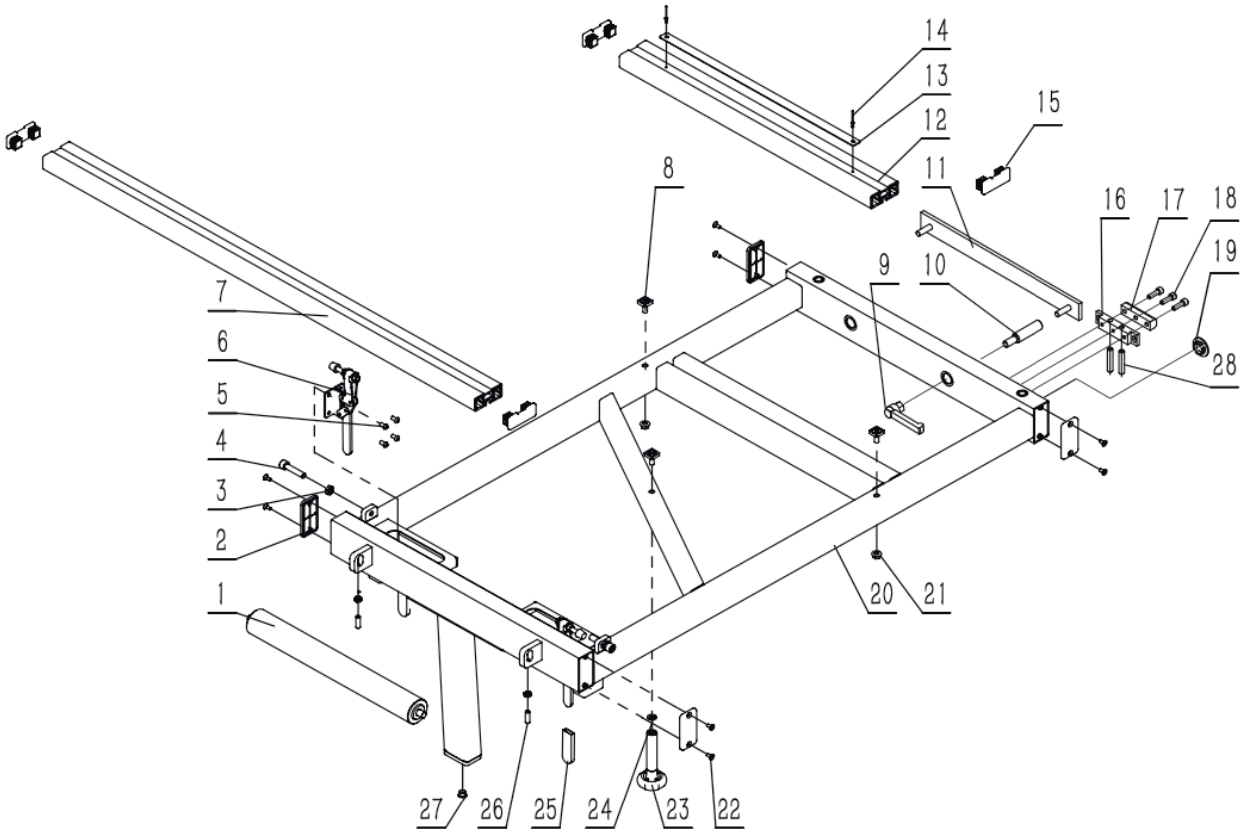

Item	Parts Name	Part No	Qty.
1	ROLLER	JXPS1604051002	1
2	END CAP	SLDT74X34A-001S	4
3	THIN NUT M10	M10GB6172D1Z	2
4	SCREW M10	M10X45GB70D1Z	2
5	SCREW M6	M6X12GB70D2Z	8
6	TOOL HOLDER	JXPS1201051006	2
7	LONG PLATE	JXPS1201051011A	1
8	LOCK BLOCK	JL84100003	3
9	ADJUSTABLE HANDLE	KTSB-1-A-M10X80	2
10	LOCK SHAFT	JXPS1201051201	2
11	LOCK PLATE	JXPS1201051002	1
12	SCALE SEAT	JXPS1201051012	1
13	ANGLE GAUGE	JXPS1602051003	1
14	REBITE	RVT3X7GB12618A	2

Item	Parts Name	Part No	Qty.
15	END CAP	GRPS1401051003	4
16	LOCK BLOCK	JXPS1201051016	2
17	GUIDE BLOCK	JXPS1201051015A	2
18	SCREW	M6X20GB70Z	6
19	MAT	JXPS1201051010	2
20	SCAFFOLD ASSY	JXPS1604051100C	1
21	NUT	M8GB6177D1Z	2
22	SCREW M5	M5X12GB70D3B	8
23	LOCK HANDLE ASSY	JL84102000	1
24	FLAT WASHER	WSH8GB97D1Z	1
25	TOOL HOLDER HANDLE SLEEVE	JXPS1201051007	2
26	SCREW M8	M8X25GB77B	2
27	SHAFT SLEEVE	P12X10X8-AGB12613	1
28	SCREW	M8X40GB77B	4

SupportBracketAssembly - SHEET O

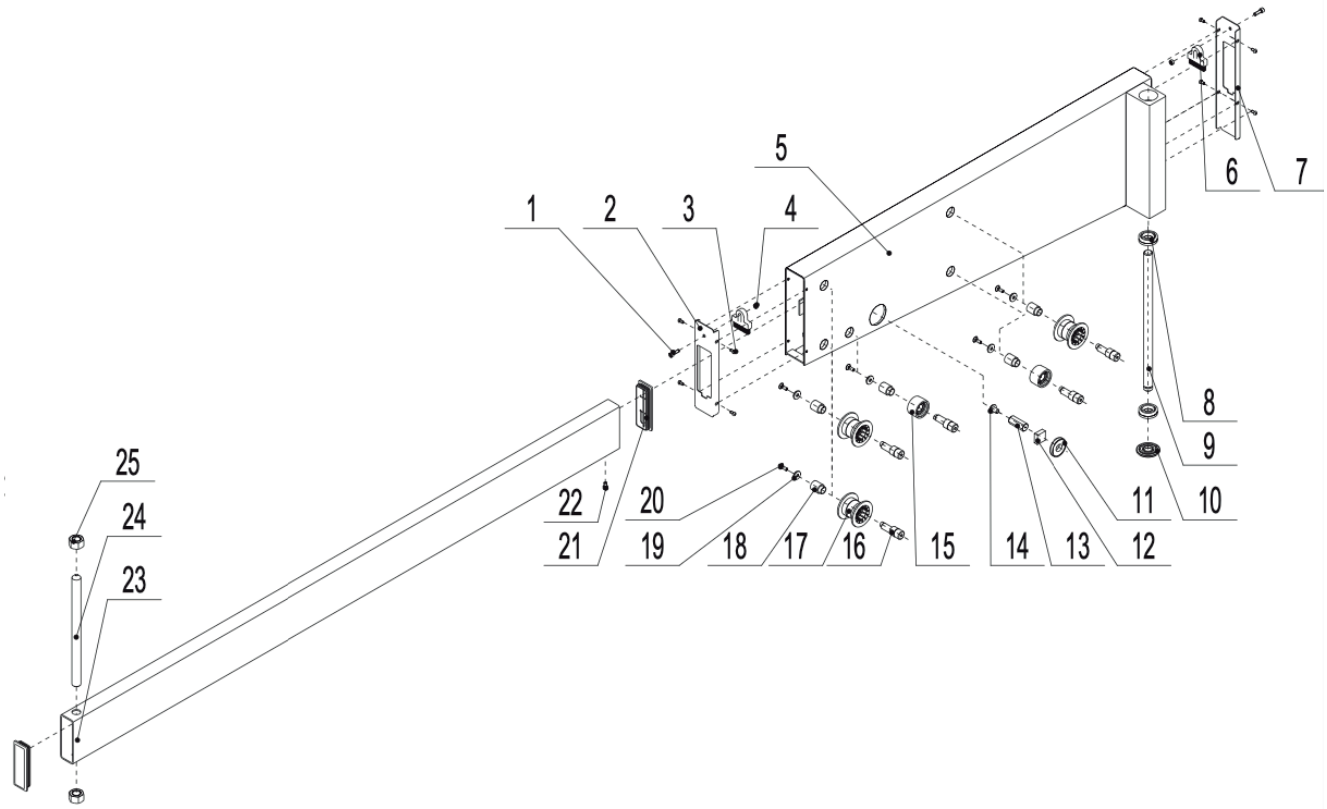

Item	Parts Name	Part No	Qty.
1	SCREW	M6X20GB70D2Z	2
2	COVER 2	JXPS1602052006A	1
3	CREW	M5X10GB818Z	8
4	HEX NUT	M6GB6170Z	3
5	SUPPORT BRACKET	JXPS1602052003C	1
6	BRUSH	JXTS1201052005	1
7	COVER 1	JXPS1602052005	1
8	BEARING	BRG6004-2RSGB276	2
9	SHAFT	JXPS1201052001C	1
10	WASHER	JXPS1201052006A	1
11	MAGNET	SCPS1601052014	1
12	SPONGE	SCPS1601052020	1
13	HEXAGONAL PRISM	SCPS1601052016	1

Item	Parts Name	Part No	Qty.
14	SCREW	M10X40GB70D2B	1
15	BEARING ROLLING WHEEL	SCPS1601052007	2
16	ECCENTRIC SHAFT	SCPS1601052004	5
17	BEARING ROLLING WHEEL	SCPS1601052019	3
18	POSITION TUBE	JXPS1602052205A	5
19	WASHER	JXPS1602052206	5
20	SCREW	M6X16GB70D3Z10D9	5
21	PLASTIC END-CAP	JXPS1602052008	1
22	SCREW	M6X20GB70D1Z	1
23	TELESCOPIC ARM	JXPS1602052004B	1
24	SUPPORT ROD	JXPS1201052001C	1
25	HEX NUT	M20GB6173Z	2

TelescopicFenceAssembly - SHEET P

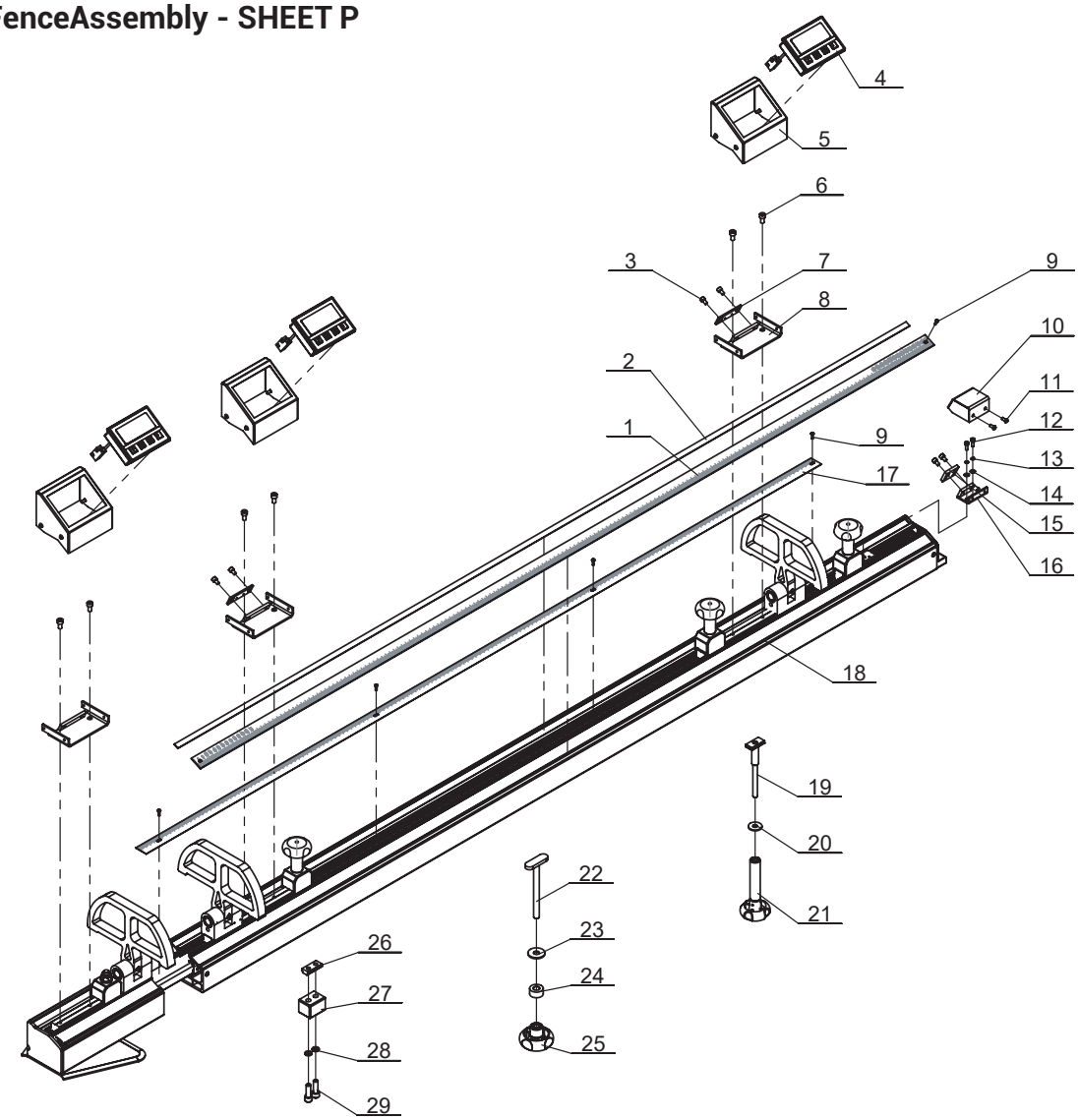

Item	Parts Name	Part No	Qty.
1	MAIN SCALE	JXPS1605053003A	1
2	MAGNETIC SCALE	XD-U-05	1
3	HEXAGON SOCKET SCREW	M5X8GB70D1Z	6
4	DIGITAL DISPLAY	MG10L-L180	2
5	DIGITAL DISPLAY GUARD	JXPS1602053014	3
6	HEXAGON SOCKET SCREW	M6X12GB70D1Z	1
7	ADJUST PLATE	JXPS1604053004B	1
8	DIGITAL DISPLAY BRACKET	JXPS1604053200B	1
9	SCREW	M3X12GB818Z	11
10	SENSOR GUARD	JXPS1604053006	1
11	HEXAGON SOCKET SCREW	M4X10GB70D2B	1
12	HEXAGON SOCKET SCREW	M4X12GB70D1Z	1
13	SPRING WASHER	WSH4GB93Z	1
14	WASHER	WSH4GB97D1Z	1

Item	Parts Name	Part No	Qty.
15	ADJUST PLATE	JXPS1604053004C	1
16	DIGITAL DISPLAY BRACKET	JXPS1604053200C	1
17	SCALE	JXPS1602053004H	1
18	FENCE ASSEMBLY	JXPS1602053100E	1
19	SLIDING BLOCK	JXPS1604053005	1
20	WASHER	WSH8GB96D1Z	1
21	LOCK HANDLE	JXTS1201131001	1
22	T-BOLT	JXPS1602053005	1
23	WASHER	WSH10GB97D1Z	1
24	SLEEVE	JXPS1602053006	2
25	HANDLE	JXPT1201060013	1
26	SLIDING BLOCK	JXPS1201053005H	2
27	SET BLOCK	JXPS1201053007A	1
28	SPRING WASHER	WSH8GB93Z	2
29	HEXAGON SOCKET SCREW	M8X25GB70D1Z	2

Adjustable Angle guid-e -SHEET Q

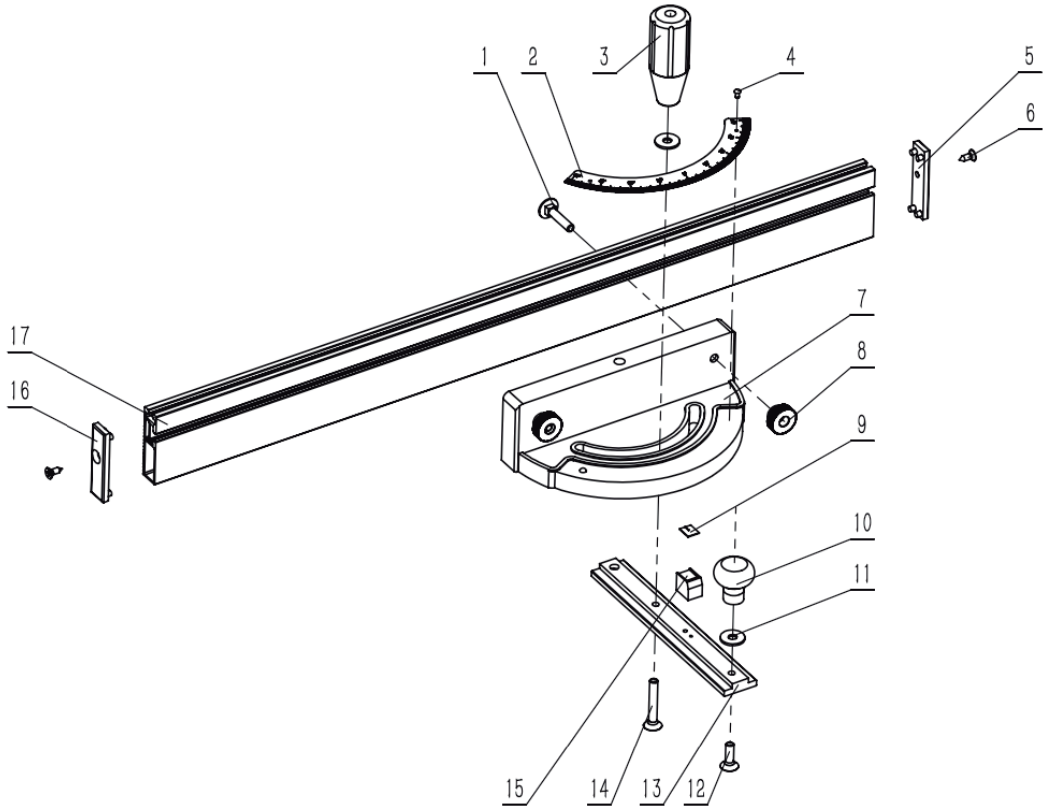

Item	Parts Name	Part No	Qty.
1	SCREW	M6X30GB14Z	2
2	ANGLE DIAL	JXPS1205054004	1
3	LOCKING HANDLE	JL82060008	1
4	RIVET	RVT2D5X5GB827C	2
5	LEFT BAFFLE PLUG	JL20062008	1
6	SCREW	ST4D2X12GB846Z	2
7	ANGLER BODY	JXPS1205054001	1
8	COMPOUND NUT	JL20061003	2
9	ANGLE ZERO SCALE	JL20062007	1

Item	Parts Name	Part No	Qty.
10	HANDLE BALL	0804011-01	1
11	WASHER	WSH6GB96D1Z	2
12	SCREW	M6X20GB70D3Z	1
13	T-BAR	JXPS1205054002	1
14	SCREW	M6X40GB70D3Z	1
15	ANGLE INDICATOR BASE	JL20062004	1
16	RIGHT BAFFLE PLUG	JL20062008F	1
17	MATERIAL BAFFLE	JXPS1205054003	1

Fixed blade cover Assembly - SHEET R

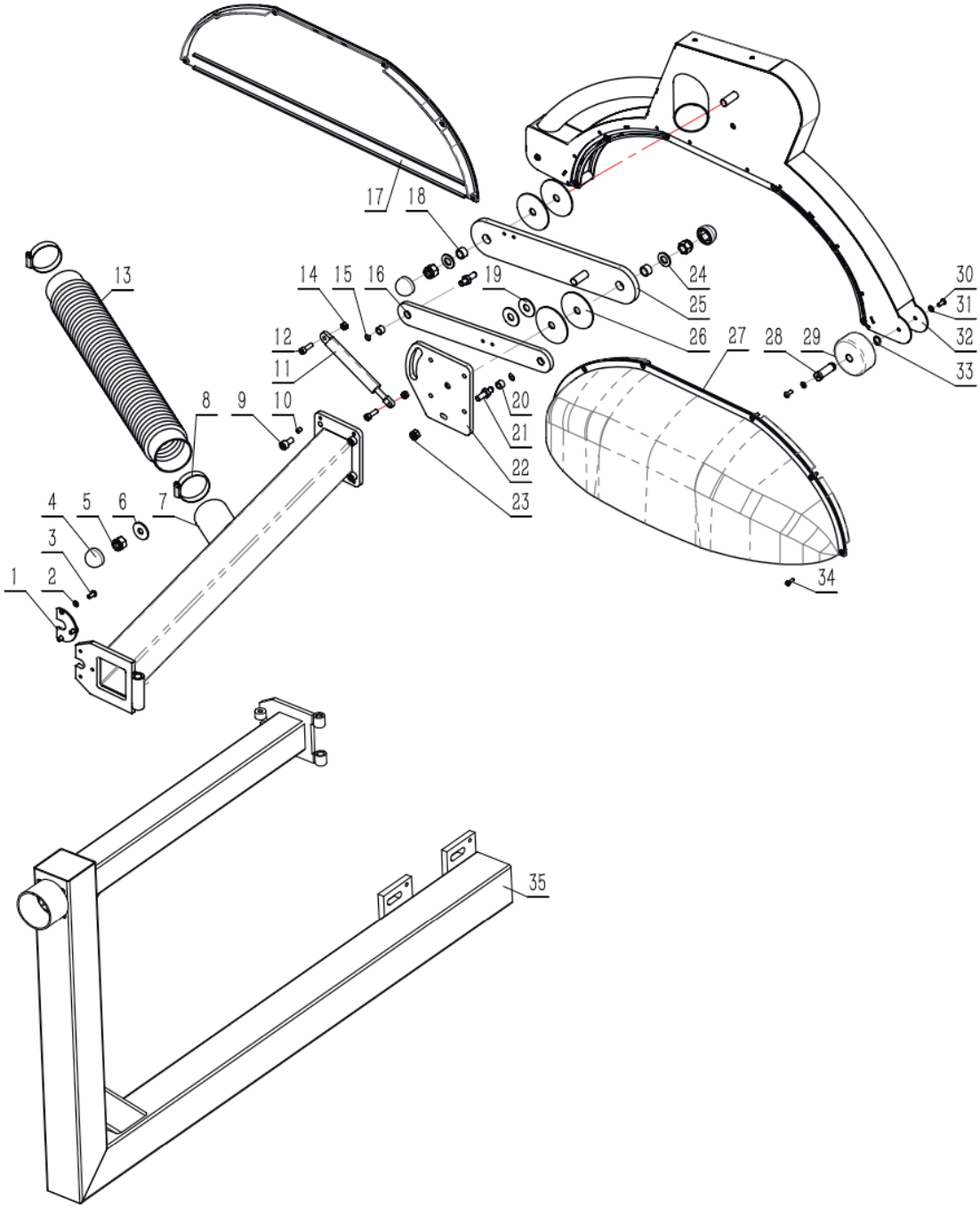

Fixed blade cover Assembly - SHEET R

Item	Parts Name	Part No	QTY.
1	LOCK PLATE	JXPS1602080004	1
2	SPRING WASHE	WSH6GB93Z	3
3	SCREW M6	M6X12GB70D2Z	3
4	NUT CAP	JXPS1201083005	3
5	LOCK NUT	M12GB889D1Z	1
6	BIG WASHER	WSH10GB96D1B	1
7	WHIRLING ARM ASSY	JXPS1201081100	1
8	CONNECTING PIPE CLAMP	JL50000018	1
9	SCREW M8	M8X16GB70D1Z	4
10	SCREW M6	M6X8GB77B	4
11	GAS SPRING	JKPS1601080002	1
12	SCREW M6	M6X20GB70D1Z	1
13	SWEEP-UP PIPE	JXPS1201084002B	1
14	NUT	M6GB6170Z	1
15	SPRING CIRCLIP	CLP8GB894D1B	1
16	CONNECTING ROD	JXPS1602081204	1
17	GUARD 90º	JXPS1201083402	1
18	COPPER BUSH	JXPS1201083004	2
19	SPACER	JXPS1201083002A	3

Item	Parts Name	Part No	QTY.
20	COPPER BUSH	JL46090007	2
21	SCREW	JXPS1201083001	2
22	CONNECTING SOLDERING PLATE	JXPS1602081400	1
23	LOCK NUT	M8GB889D1Z	4
24	FLAT WASHER	WSH12GB97D1Z	6
25	LONG CONNECTING PLATE	JXPS1602081500	1
26	SPACER	JXPS1201083002	4
27	GUARD 45º	JXPS1201083401	1
28	IDLER WHEEL SUPPORT SHAFT	JXPS1602083010A	2
29	IDLER WHEEL	JXPS1602083009A	2
30	SCREW M5	M5X12GB70D2Z	1
31	FLAT WASHER	WSH5GB97D1Z	1
32	GUARD FRAME ASSY	JXPS1602083100B	1
33	SPRING CIRCLIP	CLP12GB894D1B	1
34	CREW M4	M4X12GB70D1Z	1
35	BRACKET AS-GUARD	JXPS1602081000D	1

DADO Component - SHEET S

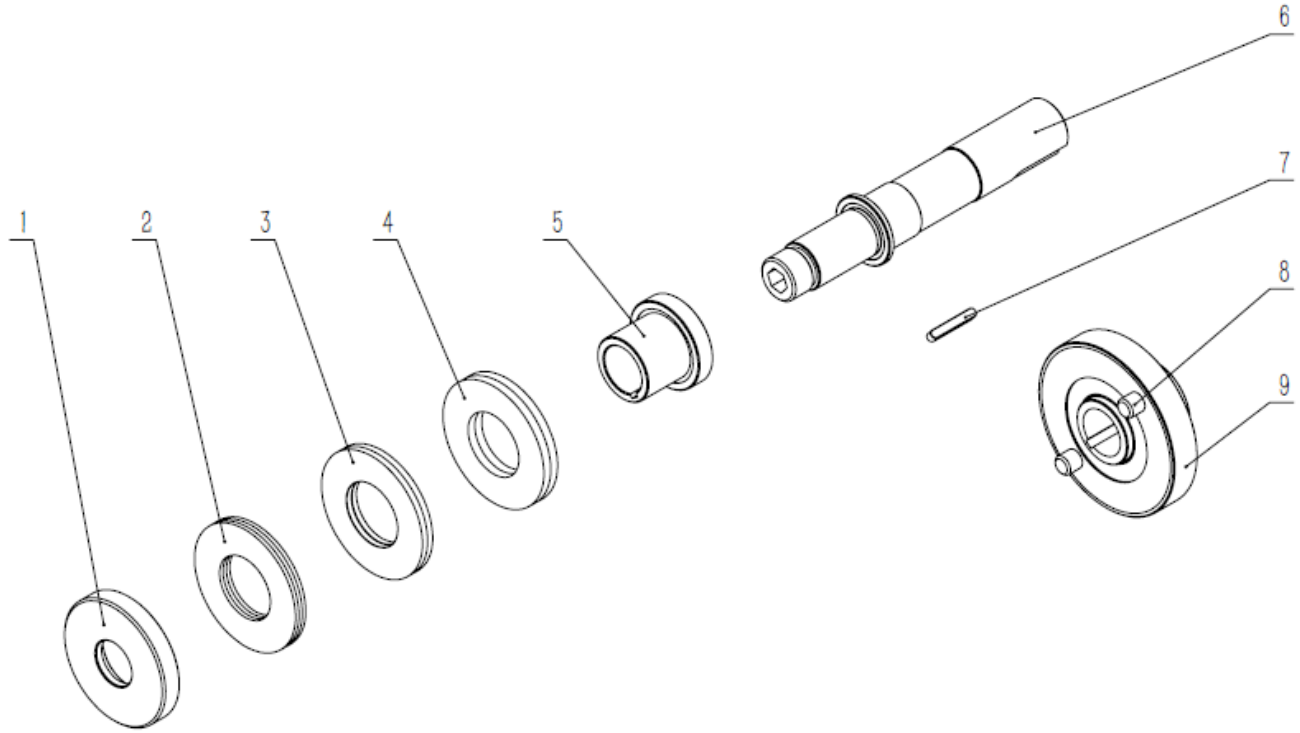

Item	Parts Name	Part No	QTY.
1	lock sleeve	JXPS1201121005	1
2	Set One	JXPS1201121001	3
3	Set Two	JXPS1201121002	2
4	Set Three	JXPS1201121003	2
5	shaft sleeve	JXPS1201121004	1
6	main shaft	JXPS1205021005	1
7	flat key	PLN4X4X26GB1096	1
8	dowel	JXPS1201021003	2
9	Inner saw blade clamp	JXPS1205021011	1

10 Terms of Warranty

MAKSIWA assures the owner that their equipment, identified by the Serial number issued on the Warranty Terms.

The equipment under warranty, for two (2) years, is as followed:

1. The warranty period begins on the date of the Warranty Terms below.
2. Within the warranty period, the manual labor and the components replaced by manufacturing defect will be provided for free if duly proved by Maksiwa Service.
3. Third-party manufacturing equipment that makes up the MAKSIWA equipment (such as motors, electrical equipment, belts etc.) are subject to the terms and conditions of warranty of their respective manufacturers.
4. In case an exchange of machine is needed, please return the defective part or machine to MAKSIWA.
5. All workplace adaptations for the equipment are under the responsibility of the machine owner.
6. If you notice any defect or malfunction when receiving the equipment, get in touch immediately with the manufacturer or Dealer. Do not turn it on.
7. Not included in this warranty is any technical visits aimed at cleaning or adjustments caused by wear, resulting from normal use of the equipment.
8. The warranty does not cover problems caused by mistreatment, carelessness, misuse or inappropriate use of the functions designed for this equipment in this manual, as well as poorly executed operations by untrained operators to operate it.
9. MAKSIWA is not responsible for lost productivity, direct or indirect damages caused to the owner of the equipment or to third parties, or any other expense, including lost profits.
10. This equipment requires the use of a dust collection system with a minimum of 2 hp.
11. Even under warranty, you may lose its validity as follows:
    a) Application of non-original components;
    b) Alteration of its original features;
    c) Lack of proper maintenance;
    d) Improper use of the equipment;
    e) Change in equipment or electronic connections;
    f) Damage caused by mechanical shock or exposure to unsuitable conditions (humidity, salt spray, corrosive agents, etc.);
    g) Damage caused by bad weather (floods, flooding, lightning, power outages etc.);
    h) Maksiwa is not responsible for damages to electrical components cause by power variation in your area.

For your safety, trust the repairs, maintenance and adjustments (including inspection and replacement) for technical assistance recommended by MAKSIWA, always use genuine spare parts and accessories, reassembling to its original machine the same way.

MODEL: SERIAL NUMBER: DATE: LOT NUMBER:

Imported by:
Maksiwa International Inc.
4100 N Powerline Rd, Suite D3
Pompano Beach, Florida
ZIP Code: 33073
Telephone: +1 (754) 205-6717 | Call us free: +1 (844) 319-6594
E-mail: tech@maksiwa.com
www.maksiwa.com